GENERAL NOTES:

1. PROVIDE A CONSTRUCTION RECORD SET OF "AS-BUILT" DOCUMENTS TO THE ARCHITECT REFLECTING ANY VARIANCES OF INSTALLED PIPING LOCATIONS OR EQUIPMENT CONTRARY TO THE CONSTRUCTION DOCUMENTS, REFER TO SPECIFICATIONS.
2. DRAWINGS ARE DIAGRAMMATIC ONLY AND REPRESENT THE GENERAL SCOPE OF THE WORK. REVIEW THE GENERAL NOTES, SPECIFICATIONS AND PLANS FOR ADDITIONAL REQUIREMENTS THAT MAY NOT BE SPECIFICALLY CALLED OUT IN THIS PORTION OF THE CONSTRUCTION DOCUMENTS. NOTIFY THE ARCHITECT OF ANY CONFLICTS OR DISCREPANCIES PRIOR TO SUBMISSION OF BID.
3. DRAWINGS ARE DIAGRAMMATIC ONLY AND REPRESENT THE GENERAL SCOPE OF THE WORK. PRIOR TO SUBMITTING BID, VISIT THE JOB SITE TO OBSERVE THE EXISTING CONDITIONS OF THE PROJECT. REVIEW THE GENERAL NOTES, SPECIFICATIONS AND PLANS FOR ADDITIONAL REQUIREMENTS THAT MAY NOT BE SPECIFICALLY CALLED OUT IN THIS PORTION OF THE CONSTRUCTION DOCUMENTS. NOTIFY ARCHITECT OF ANY CONFLICTS OR DISCREPANCIES PRIOR TO SUBMISSION OF BID.
4. PROVIDE TO THE ARCHITECT A COPY OF INSPECTION REPORTS AND APPROVAL CERTIFICATES FROM LOCAL AND STATE INSPECTIONS, REFER TO SPECIFICATIONS.
5. INSTALLATION SHALL COMPLY WITH LEGALLY CONSTITUTED CODES AND THE REQUIREMENTS OF AUTHORITIES HAVING JURISDICTION AND ALSO MEET ALL REQUIREMENTS OF THE LANDLORD. OBTAIN A COPY OF THE LANDLORD'S REQUIREMENTS AND REVIEW PRIOR TO SUBMITTING BID.
6. PLANS AND SPECIFICATIONS GOVERN WHERE THEY EXCEED CODE REQUIREMENTS.
7. VERIFY LOCATION AND DEPTH OF UTILITIES AT POINTS OF CONNECTION BEFORE START OF PIPING INSTALLATION.
8. REFER TO ARCHITECTURAL PLANS FOR EXACT LOCATION AND MOUNTING HEIGHTS OF PLUMBING FIXTURES.
9. DO NOT SCALE FLOOR PLANS FOR EXACT HORIZONTAL LOCATION OF PIPE ROUTING.
10. INSTALL CONCEALED PIPING TIGHT TO THE STRUCTURE AND AS HIGH AS POSSIBLE.
11. VALVES SHALL BE LINE SIZE UNLESS OTHERWISE NOTED.
12. INSTALL EXPOSED PIPING, WHERE NECESSARY, IN FINISHED AREAS TIGHT TO THE STRUCTURE, WALL OR CEILING AND AS HIGH AS POSSIBLE. INSTALL PIPING PARALLEL AND / OR PERPENDICULAR TO WALLS.
13. INSTALL VALVES AND APPURTENANCES A MAXIMUM OF 24" ABOVE CEILING IN ACCESSIBLE LOCATION WITHIN 24" OF ACCESS DOORS OR ACCESSIBLE CEILING TILES. PROVIDE PIPE AND FITTINGS TO INSTALL VALVES AND APPURTENANCES AT REQUIRED HEIGHT AND WITHIN 24" OF ACCESS DOORS OR ACCESSIBLE CEILING TILES.
14. INSTALL NO PLASTIC PIPE OF ANY KIND ABOVE SLAB INSIDE OR UNDER THE BUILDING. INSTALL NO PLASTIC PIPE IN THE CEILING RETURN AIR PLENUM.
15. COORDINATE ALL WORK WITH OTHER TRADES AND CONTRACTORS.
16. COORDINATE PIPING INSTALLATION WITH STRUCTURAL GRADE BEAMS, FOOTINGS, COLUMN PIERS, ETC. SLEEVE PIPING THROUGH GRADE BEAMS, FOOTING, ETC. WHERE REQUIRED AND AS NOTED ON PLANS. COORDINATE SLEEVE INSTALLATIONS WITH THE ARCHITECT, STRUCTURAL ENGINEER, STRUCTURAL CONTRACTOR AND GENERAL CONTRACTOR BEFORE CONCRETE IS INSTALLED.
17. CLEAN FAUCET AERATORS AND PIPE STRAINERS PRIOR TO TURNING BUILDING OVER TO THE OWNER.
18. PROVIDE TRAP PRIMERS WHERE REQUIRED BY LOCAL AUTHORITIES.
19. COORDINATE PIPE ROUTING AWAY FROM ELECTRICAL PANELS. DO NOT INSTALL PIPING OVER ELECTRICAL PANELS.
20. PAINT ALL EXPOSED GAS AND WATER PIPING USING RUST INHIBITOR PAINT. PAINT AND COLOR SHALL BE COORDINATED WITH THE ARCHITECT AND / OR OWNER.
21. COORDINATE ALL ROOF PENETRATIONS WITH OTHER TRADES. MAINTAIN 10' MINIMUM CLEARANCE FROM ALL AIR INTAKES. MAINTAIN 2' CLEARANCE FROM ALL OTHER EQUIPMENT.
22. INSULATE PIPING ROUTED IN EXTERIOR BUILDING WALLS WITH MINIMUM 2" BATT INSULATION TO PREVENT FREEZING.
23. PROVIDE "HEAVY-DUTY" NO-HUB COUPLINGS ON STORM PIPING, INCLUDING CONNECTIONS TO ROOF DRAINS. SEE DIVISION 22 SPECIFICATION SECTION "STORM DRAINAGE PIPING AND SPECIALTIES" FOR MORE INFORMATION.
24. PROVIDE TRANSITION ADAPTER COUPLINGS FOR CONNECTION OF PVC DWV TO CAST IRON AT SLAB ON GRADE. SEE DIVISION 22 SPECIFICATION FOR MORE INFORMATION.
25. PROVIDE TRANSITION ADAPTER COUPLINGS FOR CONNECTION OF PVC DWV TO CAST IRON SANITARY, WASTE AND VENT PIPE AT SLAB ON GRADE. SEE DIVISION 22 SPECIFICATION SECTION "SANITARY DRAINAGE AND VENT PIPING AND SPECIALTIES" FOR MORE INFORMATION.
26. PROVIDE TRANSITION ADAPTER COUPLINGS FOR CONNECTION OF PVC DWV TO CAST IRON STORM PIPE AT SLAB ON GRADE. SEE DIVISION 22 SPECIFICATION SECTION "STORM DRAINAGE PIPING AND SPECIALTIES" FOR MORE INFORMATION.
27. FLOW CONTROL VALVES SHALL BE SIZE 1/2" AND SET AT 0.5 GPM UNLESS NOTED OTHERWISE.
28. WATER HAMMER ARRESTORS SHALL BE SIZE "A" UNLESS NOTED OTHERWISE.
29. PROVIDE VERTICAL LIFT SPRING LOADED CHECK VALVES IN HOT AND COLD WATER SUPPLIES FOR MOP SINK FAUCETS DOWNSTREAM OF SHUTOFF VALVES.
30. PROVIDE WALL PIPES AT PIPING PENETRATIONS OF ELEVATED WATERPROOF FLOOR SLABS, REFER TO SPECIFICATIONS.
31. VERIFY EXISTING EQUIPMENT, INCLUDING ACCESSORIES, IS NOT DAMAGED AND IS IN GOOD WORKING ORDER. REPORT ANY DEFICIENCIES TO THE ARCHITECT.

PLUMBING SYMBOLS

THIS IS A MASTER LEGEND AND NOT ALL SYMBOLS OR ABBREVIATIONS ARE USED. V2.02

STANDARD MOUNTING HEIGHTS

CLINIC SERVICE SINKS (RIM)	30"
HOSE BIBB (CENTERLINE)	36"
ICE MAKER OUTLET BOX (CENTER OF BOX)	24"
JANITOR'S SINK FAUCET FITTINGS (CENTERLINE)	42"
LAVATORY OR SINK	
STANDARD HEIGHT (RIM)	31"
ADA ACCESSIBLE (RIM)	34"
CHILD HEIGHT (RIM)	24"
NON FREEZE WALL HYDRANT (AFG TO CENTERLINE)	18"
SHOWER HEAD	
MEN (CENTERLINE)	78"
WOMEN (CENTERLINE)	72"
SHOWER VALVE	
STANDARD HEIGHT - MEN (CENTERLINE)	48"
STANDARD HEIGHT - WOMEN (CENTERLINE)	42"
ADA ACCESSIBLE (CENTERLINE)	38" TO 48"
SURGEON'S SCRUB-UP SINK (FRONT RIM)	35"
TUB VALVE	
STANDARD HEIGHT (CENTERLINE)	32"
ADA ACCESSIBLE	CENTER BETWEEN GRAB BAR AND TUB RIM
URINAL	
STANDARD HEIGHT (RIM)	24"
ADA ACCESSIBLE (RIM)	17"
CHILD HEIGHT (RIM)	14"
WASHING MACHINE OUTLET BOX (RIM)	42"
WATER CLOSET	
STANDARD HEIGHT (RIM)	15"
ADA ACCESSIBLE (TOP OF SEAT)	17" TO 19"
CHILD HEIGHT (RIM)	10"
WATER COOLER OR DRINKING FOUNTAIN	
STANDARD HEIGHT (SPOUT)	41"
ADA ACCESSIBLE (SPOUT)	36"
CHILD HEIGHT (SPOUT)	30"

INSTALL PLUMBING FIXTURES AT THE MOUNTING HEIGHTS SHOWN ABOVE UNO IN THE ARCHITECTURAL DRAWINGS OR ELSEWHERE IN THE CONSTRUCTION DOCUMENTS. FINAL APPROVAL OF LOCATIONS BY ARCHITECT. MOUNTING HEIGHTS LISTED ABOVE, OR ELSEWHERE IN THE CONSTRUCTION DOCUMENTS, ARE AFF, UNO. ALL DEVICES SHALL BE INSTALLED IN COMPLIANCE WITH CURRENT ADA AND LOCAL REQUIREMENTS.

ANNOTATION

- 1 — PLUMBING PLAN NOTE CALLOUT
- 1 — PLUMBING EQUIPMENT DESIGNATION. (CONTRACTOR FURNISHED AND INSTALLED). REFER TO PLUMBING FIXTURE OR EQUIPMENT SCHEDULES
- 1 — EQUIPMENT DESIGNATION (OWNER FURNISHED, CONTRACTOR INSTALLED)
- CU 1 — MECHANICAL EQUIPMENT DESIGNATION (CONTRACTOR FURNISHED AND INSTALLED UNLESS NOTED OTHERWISE)
- CONNECTION POINT OF NEW WORK TO EXISTING
- 1 P1 — DETAIL REFERENCE UPPER NUMBER INDICATES DETAIL NUMBER LOWER NUMBER INDICATES SHEET NUMBER
- 1 P1 — SECTION CUT DESIGNATION
- DEDICATED EQUIPMENT ACCESS TILE
- ACCESS PANEL

ABBREVIATIONS

ADA	AMERICANS WITH DISABILITIES ACT
AFF	ABOVE FINISHED FLOOR
AFG	ABOVE FINISHED GRADE
AHU	AIR HANDLING UNIT
AP	ACCESS PANEL
BAS	BUILDING AUTOMATION SYSTEM
BFF	BELOW FINISHED FLOOR
BFG	BELOW FINISHED GRADE
BOP	BOTTOM OF PIPE
BOS	BOTTOM OF STRUCTURE
BTU	BRITISH THERMAL UNIT
CP	CONDENSATE PUMP
CPVC	CHLORINATED POLYVINYL CHLORIDE
CU	COPPER
DI	DUCTILE IRON
DN	DOWN
DFU	DRAINAGE FIXTURE UNIT
DS	DOWNSPOUT
(E)	EXISTING
EMS	ENERGY MANAGEMENT SYSTEM
ETR	EXISTING TO REMAIN
EWC	ELECTRIC WATER COOLER
FD	FLOOR DRAIN
FFA	FROM FLOOR ABOVE
FFB	FROM FLOOR BELOW
FF	FINISHED FLOOR
FL	FLOW LINE
FLA	FULL LOAD AMPS
FLR	FLOOR
GPM	GALLONS PER MINUTE
HD	HEAD, HUB DRAIN
HZ	HERTZ
IE	INVERT ELEVATION
IN WC	INCHES OF WATER COLUMN
JB	JUNCTION BOX
J-BOX	JUNCTION BOX
KW	KILOWATT
MAU	MAKE-UP AIR UNIT
MAX	MAXIMUM
MBH	1000 BTU PER HOUR
MH	MANHOLE
MIN	MINIMUM
N/C	NORMALLY CLOSED
N/O	NORMALLY OPEN
NIC	NOT IN CONTRACT
ORD	OVERFLOW ROOF DRAIN
PDI	PLUMBING DRAINAGE INSTITUTE
PH/Ø	PHASE
PRV	PRESSURE REDUCING VALVE
PVC	POLYVINYL CHLORIDE
RCP	REINFORCED CONCRETE PIPE
RD	ROOF DRAIN
RPM	REVOLUTIONS PER MINUTE
RTU	ROOFTOP UNIT
SF	SQUARE FEET
SP	SUMP
SS	STAINLESS STEEL SANITARY SEWER, SOIL STACK
TDH	TOTAL DYNAMIC HEAD
TFA	TO FLOOR ABOVE
TFB	TO FLOOR BELOW
TYP	TYPICAL
UL	UNDERWRITERS LABORATORIES, INC.
UNO	UNLESS NOTED OTHERWISE
UPS	UNINTERRUPTIBLE POWER SUPPLY
VCP	VITRIFIED CLAY PIPE
VFD	VARIABLE FREQUENCY DRIVE
VS	VENT STACK
VTR	VENT THROUGH ROOF
W/	WITH
W/O	WITHOUT
WC	WATER COLUMN
WS	WASTE STACK
WSFU	WATER SUPPLY FIXTURE UNIT
WVS	WASTE VENT STACK

PIPING SYMBOLS

- OXYGEN OUTLET
- NITROUS OXIDE OUTLET
- MEDICAL AIR OUTLET
- NITROGEN OUTLET
- MEDICAL VACUUM INLET
- FLOOR SINK (FS), SIZE & TYPE
- FLOOR DRAIN (FD), SIZE & TYPE
- ROOF DRAIN (RD), SIZE & TYPE
- BALL VALVE
- CONTROL VALVE
- SHUTOFF VALVE
- CHECK VALVE
- BALANCING VALVE WITH PRESSURE PORTS
- WATER METER
- STRAINER
- STRAINER WITH BLOWOFF
- RELIEF/SAFETY VALVE
- SOLENOID VALVE
- PRESSURE REDUCING VALVE
- GAS PRESSURE REGULATOR
- THERMOSTATIC MIXING VALVE
- PA — PIPE ANCHOR
- EXPANSION JOINT
- BACKFLOW PREVENTER
- PRESSURE GAUGE
- THERMOMETER
- UNION
- FLANGE CONNECTION
- HOSE BIBB (HB)
- NON-FREEZING WALL HYDRANT (NW)
- MANUAL / AUTOMATIC AIR VENT OR VACUUM RELIEF VALVE
- PRESSURE / VACUUM SWITCH
- CLEANOUT
- CAP
- WALL CLEANOUT (WCO)
- FLOOR CLEANOUT (FCO)
- EXTERIOR CLEANOUT (ECO)
- ELBOW UP
- ELBOW DOWN
- TEE UP
- TEE DOWN
- ELBOW UP WITH SHUT-OFF VALVE (SOV)
- ELBOW DOWN WITH SHUT-OFF VALVE (SOV)
- TEE UP WITH SHUT-OFF VALVE (SOV)
- TEE DOWN WITH SHUT OFF VALVE (SOV)
- "A" — WATER HAMMER ARRESTER (WHA) WITH PDI SIZES, (A, B, C, D, & E)
- RECIRCULATION PUMP
- P-TRAP
- GAS COCK
- TRAP PRIMER
- TRAP PRIMER WITH DISTRIBUTION UNIT

PIPING LINETYPES

CW	DOMESTIC COLD WATER (CW)
SCW	SOFTENED COLD WATER (SCW)
HW	DOMESTIC HOT WATER (HW)
HWR	DOMESTIC HOT WATER RECIRC. (HWR)
140°	DOMESTIC HOT WATER (140°)
T	TRAP PRIMER LINE (T)
S	SOIL PIPING - ABOVE FLOOR (S)
S	SOIL PIPING - BELOW FLOOR (S)
W	WASTE PIPING - ABOVE FLOOR (W)
W	WASTE PIPING - BELOW FLOOR (W)
GW	GREASE WASTE - ABOVE FLOOR (GW)
GW	GREASE WASTE - BELOW FLOOR (GW)
CGWV	COMBINATION GREASE WASTE AND VENT (CGWV)
CWV	COMBINATION WASTE AND VENT (CWV)
ST	STORM DRAIN - ABOVE FLOOR (ST)
ST	STORM DRAIN - BELOW FLOOR (ST)
OST	OVERFLOW STORM DRAIN - ABOVE FLOOR (OST)
VBG	VENT BELOW GRADE (VBG)
VBF	VENT BELOW FLOOR (VBF)
ID	INDIRECT DRAIN (ID)
CDH	CONDENSATE DRAIN - HIGH EFFICIENCY RTU (CDH)
CD	CONDENSATE DRAIN (CD)
ACD	AUXILIARY CONDENSATE DRAIN (ACD)
SPD	SUMP OR SEWAGE PUMP DISCHARGE (SPD)
G	NATURAL GAS (G)
G	NATURAL GAS ON ROOF (G)
MPG	MEDIUM PRESSURE NATURAL GAS (MPG)
MPG	MEDIUM PRESSURE NATURAL GAS ON ROOF (MPG)
NPW	NON-POTABLE WATER (NPW)
LPG	LIQUEFIED PETROLEUM GAS (LPG)
WS	WATER SERVICE (WS)
DFP	FIRE PROTECTION SPRINKLER DRY (DFP)
FP	FIRE PROTECTION SPRINKLER WET (FP)
DSP	FIRE PROTECTION STANDPIPE DRY (DSP)
WSP	FIRE PROTECTION STANDPIPE WET (WSP)
PD	CONDENSATE PUMP DISCHARGE (PD)
V	VENT PIPING (V)
AW	ACID WASTE - ABOVE FLOOR (AW)
AW	ACID WASTE - BELOW FLOOR (AW)
AV	ACID VENT (AV)
GWS	GRAY WATER (GWS)
CA	COMPRESSED AIR (CA)
MA	MEDICAL AIR (MA)
MV	MEDICAL VACUUM (VE)
HE	HELIUM (HE)
IA	INSTRUMENT AIR (IA)
IV	INSTRUMENT VACUUM (IV)
N2	NITROGEN (N2)
N2O	NITROUS OXIDE (N20)
O2	OXYGEN (O2)
EV	EVAC/WAGD (EV)
CO2	CARBON DIOXIDE (CO2)
AI	MEDICAL AIR INTAKE (AI)
VE	MEDICAL VACUUM EXHAUST (VE)
DA	DENTAL AIR (DA)
DV	DENTAL VACUUM (DV)
FW1	FILTERED WATER (FW1)
FW2	FILTERED WATER W/ SCALE INHIBITOR (FW2)
RO	REVERSE OSMOSIS (RO)
ROR	REVERSE OSMOSIS REMINERALIZATION (ROR)

LINETYPE LEGEND

THROUGHOUT THE DRAWINGS DIFFERENT LINETYPES ARE USED IN COMBINATION WITH THE SYMBOLS TO INDICATE THE STATUS OF ITEMS AS EXISTING, TO BE DEMOLISHED, TO BE INCLUDED AS PART OF NEW WORK AND/OR ITEMS WHICH ARE ANTICIPATED TO BE PROVIDED IN THE FUTURE. THE STATUS OF ITEMS USING THESE LINETYPES ARE RELATIVE TO THE VIEW IN WHICH THEY APPEAR. PHASING SHOWN IN DRAWINGS IS NOT INTENDED TO FULLY DESCRIBE ALL NECESSARY CONSTRUCTION PHASING, WHICH IS DETERMINED BY THE CONTRACTOR AS PART OF THEIR RESPONSIBILITIES. ANY SUCH PHASES DESCRIBED IN THE CONSTRUCTION DOCUMENTS ARE GENERAL AND ONLY INTENDED TO INDICATE A BROAD ORDER FOR THE SAKE OF DESCRIBING THE PROJECT. THE FOLLOWING LINETYPES MAY BE USED ON ANY DEVICE, EQUIPMENT, NOTE, LINE, SHAPE, ETC.

EXISTING	NEW
DEMOLISH	FUTURE

HATCHING LEGEND

- ENLARGED PLAN
- NOT IN SCOPE (NIS)

HENDERSON ENGINEERS
8345 LENEXA DRIVE, SUITE 300
LENEXA, KS 66214
TEL 913.742.5000 · FAX 913.742.5001
WWW.HENDERSONENGINEERS.COM
2250004109
IL CORPORATE NO. 184-002965
EXPIRES 4/30/2025

EXPIRES ON: 11/30/2025

LICENSED PROFESSIONAL ENGINEER SCOTT A. WALTER 062.075705 OF ILLINOIS

03/01/2024

HMN architects
7400 W. 110th Street, Suite 200
Overland Park, Kansas 66210
913.451.9075 phone
913.451.9080 fax
hmnarchitects.com

KLINGNER & ASSOCIATES, P.C.
Engineers • Architects • Surveyors
604 LIBERTY ST. SUITE 125
PELLA, IA 50219
515.612.7402
www.klingner.com

Henderson Engineers
8345 Lenexa Dr., Ste 300
Lenexa, KS 66214 913.742.5000

Chastain & Associates LLC
330 N. Central Ave.
Paris, IL 61944 217.465.5006

BID & PERMIT

EDGAR COUNTY PUBLIC SAFETY CENTER

EDGAR COUNTY, ILLINOIS
12636 950TH ROAD
PARIS, ILLINOIS 61944

21003.003

BID & PERMIT

Architect's Name
License #: XXXXX
Date: 03/01/2024

#	Issue	Date

Drawn by: Author

Copyright © 2024 by HMN Architects, Inc.

PLUMBING GENERAL NOTES AND LEGEND

P000

SCOTT A. WALTER

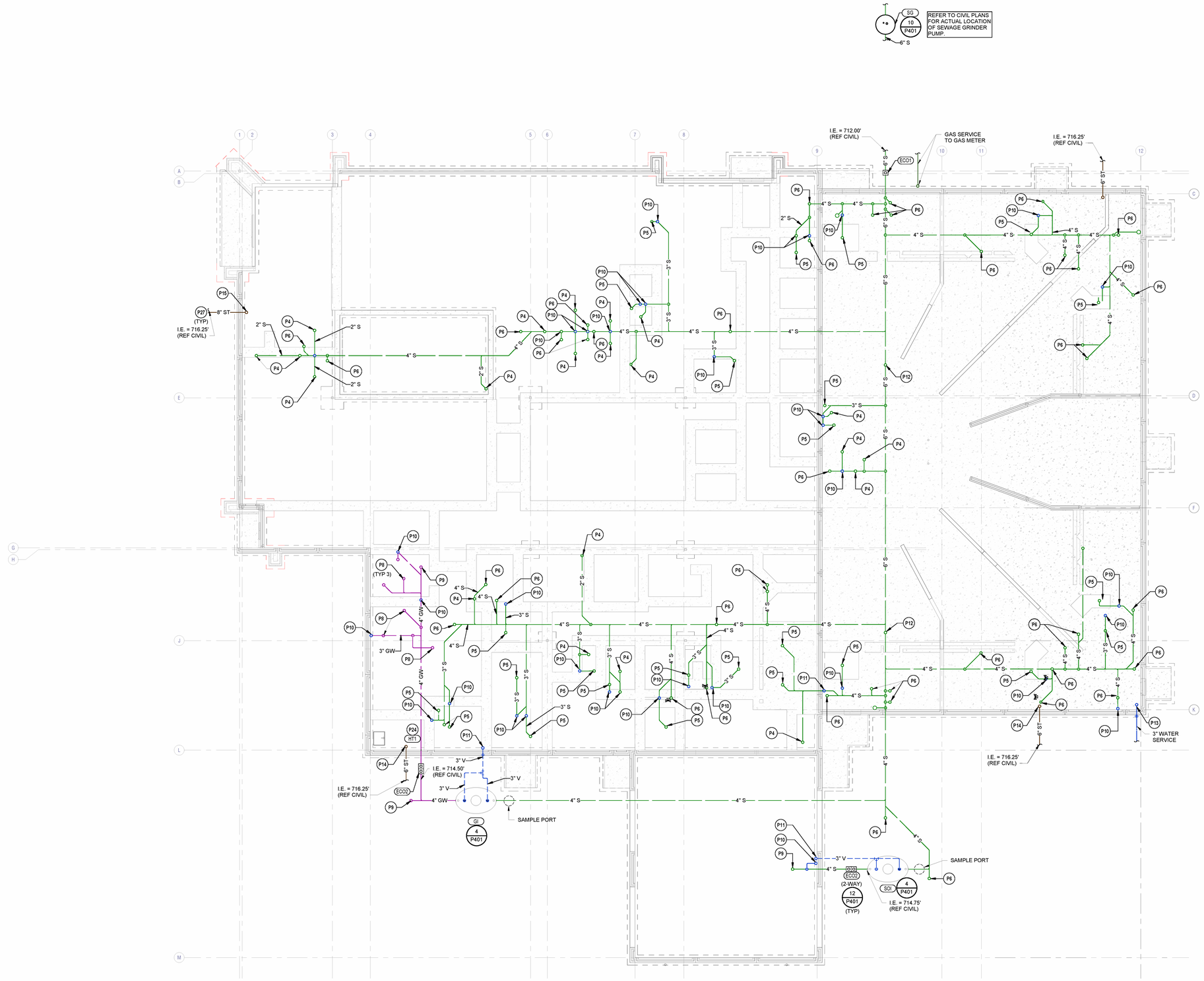

1 PLUMBING FOUNDATION PLAN
1/8" = 1'-0"

PLUMBING PLAN NOTES:

P4 2" S FFA
P5 3" S FFA
P6 4" S FFA
P8 3" GW FFA
P9 4" GW FFA
P10 2" V TFA
P11 3" V TFA
P12 6" S FFA
P13 3" WATER SERVICE TFA
P14 6" ST FFA
P15 8" ST FFA
P24 INSTALL HEAT TRACE TO ENTIRE GREASE WASTE SYSTEM. ALL GREASE WASTE PIPING SHALL BE CAST IRON WRAPPED WITH 2" INSULATION. REFERENCE SPECIFICATIONS FOR ADDITIONAL INFORMATION.
P27 INSTALL BELOW GRADE INSULATION ON STORM DRAIN PIPING A MINIMUM OF 20' BEYOND EXTERIOR WALL OF BUILDING.

HENDERSON ENGINEERS
8345 LENEXA DRIVE, SUITE 300
LENEXA, KS 66214
TEL 913.742.5000 FAX 913.742.5001
WWW.HENDERSONENGINEERS.COM
2250004106
IL CORPORATE NO.: 184-002965
EXPIRES 4/30/2025
EXPIRES ON: 11/30/2025
LICENSED PROFESSIONAL ENGINEER
SCOTT A. WALTER
062-075705
OF ILLINOIS
03/01/2024

HMN architects
7400 W. 110th Street, Suite 200
Overland Park, Kansas 66210
913.451.9075 phone
913.451.9080 fax
hmnarchitects.com

KLINGNER & ASSOCIATES, P.C.
Engineers • Architects • Surveyors
604 LIBERTY ST, SUITE 125
PELLA, IA 50219
515.612.7402
www.klingner.com

Henderson Engineers
8345 Lenexa Dr., Ste 300
Lenexa, KS 66214 913.742.5000
Chastain & Associates LLC
330 N. Central Ave.
Paris, IL 61944 217-465-5006

BID & PERMIT

EDGAR COUNTY PUBLIC SAFETY CENTER

EDGAR COUNTY, ILLINOIS
12636 950TH ROAD
PARIS, ILLINOIS 61944

21003.003

BID & PERMIT

Architect's Name
License #: XXXXX
Date: 03/01/2024

#	Issue	Date

Drawn by: Author

Copyright © 2024 by HMN Architects, Inc.

PLUMBING FOUNDATION PLAN

P100

SCOTT A. WALTER

PLUMBING PLAN NOTES:

P1 DO NOT INSTALL PLUMBING PIPING OVER ELECTRICAL PANELS OR EQUIPMENT.

P2 COORDINATE WATER PIPE ROUTING AWAY FROM ELECTRIC PANELS. MAINTAIN CLEARANCES PER NEC.

P16 ROUTE VENT PIPING BELOW MEZZANINE SLAB DOWN TO EDGE OF SLAB TO RISER. COORDINATE PIPE ROUTING WITH ALL OTHER DISCIPLINES.

P17 INDICATED PIPE RISERS TO BE ROUTED UP AT EDGE OF MEZZANINE SLAB OVERHEAD.

P22 INSTALL DRAIN PANS UNDER SANITARY PIPING AS NEEDED TO PROTECT ELECTRICAL EQUIPMENT MOUNTED BELOW PIPING. ADD ABOVE SLAB HUB DRAINS IN EXPOSED SANITARY PIPING IF NEEDED TO SERVE DRAIN PAN DISCHARGE.

P25 ROUTE 3/4" CD DOWN IN WALL AND DISCHARGE TO FLOOR SINK WITH AIR GAP.

P26 INSTALL CHECK VALVE IN EACH UNITS PUMPED CONDENSATE BRANCH DISCHARGE PIPING TO PROTECT AGAINST BACKFLOW TO OTHER UNITS.

P37 INDICATED LENGTH OF TRENCH DRAIN IS NOMINAL. ACTUAL DIMENSION SHOULD BE SIMILAR BUT BASED ON MANUFACTURE AND INSTALLATION REQUIREMENTS.

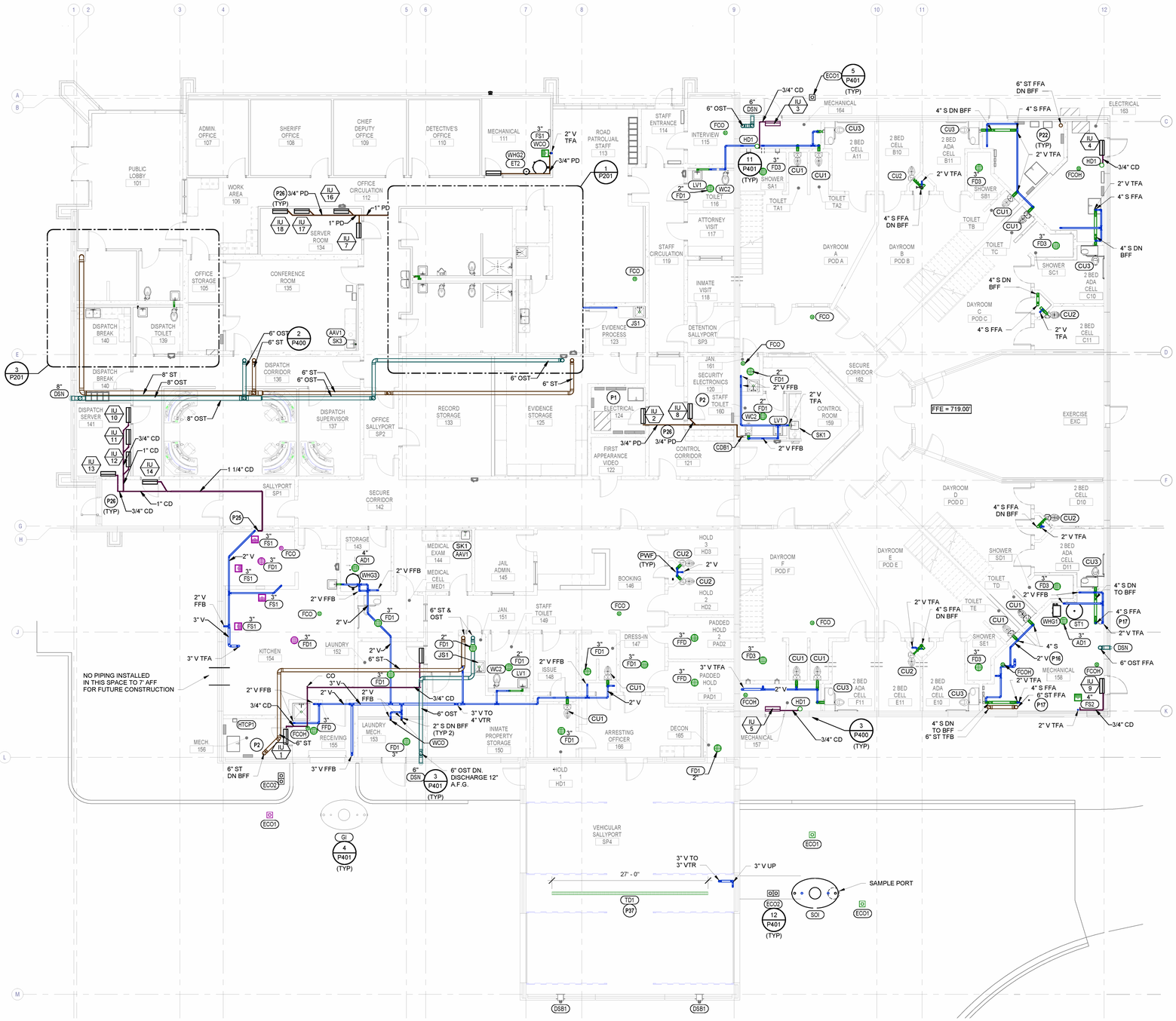

1 PLUMBING WASTE & VENT FIRST FLOOR PLAN - OVERALL
1/8" = 1'-0"

HENDERSON ENGINEERS
8345 LENEXA DRIVE, SUITE 300
LENEXA, KS 66214
TEL 913.742.5000 FAX 913.742.5001
WWW.HENDERSONENGINEERS.COM

2250004109
IL CORPORATE NO: 184-002965
EXPIRES 4/30/2025

EXPIRES ON: 11/30/2025

LICENSED PROFESSIONAL ENGINEER
SCOTT A. WALTER
062.075705
OF ILLINOIS

03/01/2024

HMN architects
7400 W. 110th Street, Suite 200
Overland Park, Kansas 66210
913.451.9075 phone
913.451.9080 fax
hmnarchitects.com

KLINGNER & ASSOCIATES, P.C.
Engineers • Architects • Surveyors
604 LIBERTY ST. SUITE 125
PELLA, IA 50219
515.612.7402
www.klingner.com

Henderson Engineers
8345 Lenexa Dr., Ste 300
Lenexa, KS 66214 913.742.5000
Chastain & Associates LLC
330 N. Central Ave.
Paris, IL 61944 217.465.5006

BID & PERMIT

EDGAR COUNTY PUBLIC SAFETY CENTER

EDGAR COUNTY, ILLINOIS
12636 950TH ROAD
PARIS, ILLINOIS 61944

21003.003

BID & PERMIT

Architect's Name
License #: XXXXX
Date: 03/01/2024

	Issue	Date

Drawn by: Author

Copyright © 2024 by HMN Architects, Inc.

PLUMBING WASTE & VENT FIRST FLOOR PLAN - OVERALL

P101

SCOTT A. WALTER

PLUMBING PLAN NOTES:

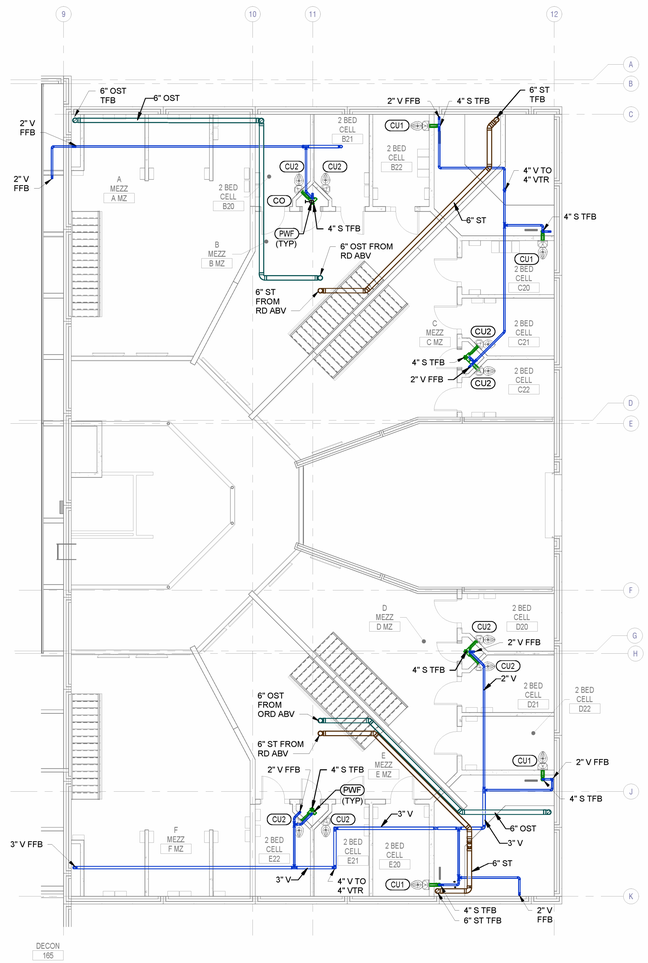

1 PLUMBING WASTE & VENT MEZZANINE PLAN - JAIL
1/8" = 1'-0"

HENDERSON ENGINEERS
8345 LENEXA DRIVE, SUITE 300
LENEXA, KS 66214
TEL 913.742.5000 **FAX** 913.742.5001
WWW.HENDERSONENGINEERS.COM

2250004109
IL CORPORATE NO. 184-002965
EXPIRES 4/30/2025

EXPIRES ON: 11/30/2025

LICENSED PROFESSIONAL ENGINEER
SCOTT A. WALTER
062.075705
OF ILLINOIS

03/01/2024

HMN architects
7400 W. 110th Street, Suite 200
Overland Park, Kansas 66210
913.451.9075 phone
913.451.9080 fax
hmnarchitects.com

KLINGNER & ASSOCIATES, P.C.
Engineers • Architects • Surveyors
604 LIBERTY ST, SUITE 125
PELLA, IA 50219
515.612.7402
www.klingner.com

Henderson Engineers
8345 Lenexa Dr., Ste 300
Lenexa, KS 66214 913.742.5000

Chastain & Associates LLC
330 N. Central Ave.
Paris, IL 61944 217.465.5306

BID & PERMIT

EDGAR COUNTY PUBLIC SAFETY CENTER

EDGAR COUNTY, ILLINOIS
12636 950TH ROAD
PARIS, ILLINOIS 61944

21003.003

BID & PERMIT

Architect's Name
License #: XXXXX
Date: 03/01/2024

	Issue	Date

Drawn by: Author
Copyright © 2024 by HMN Architects, Inc.

PLUMBING WASTE & VENT MEZZANINE PLAN - JAIL

P102

SCOTT A. WALTER

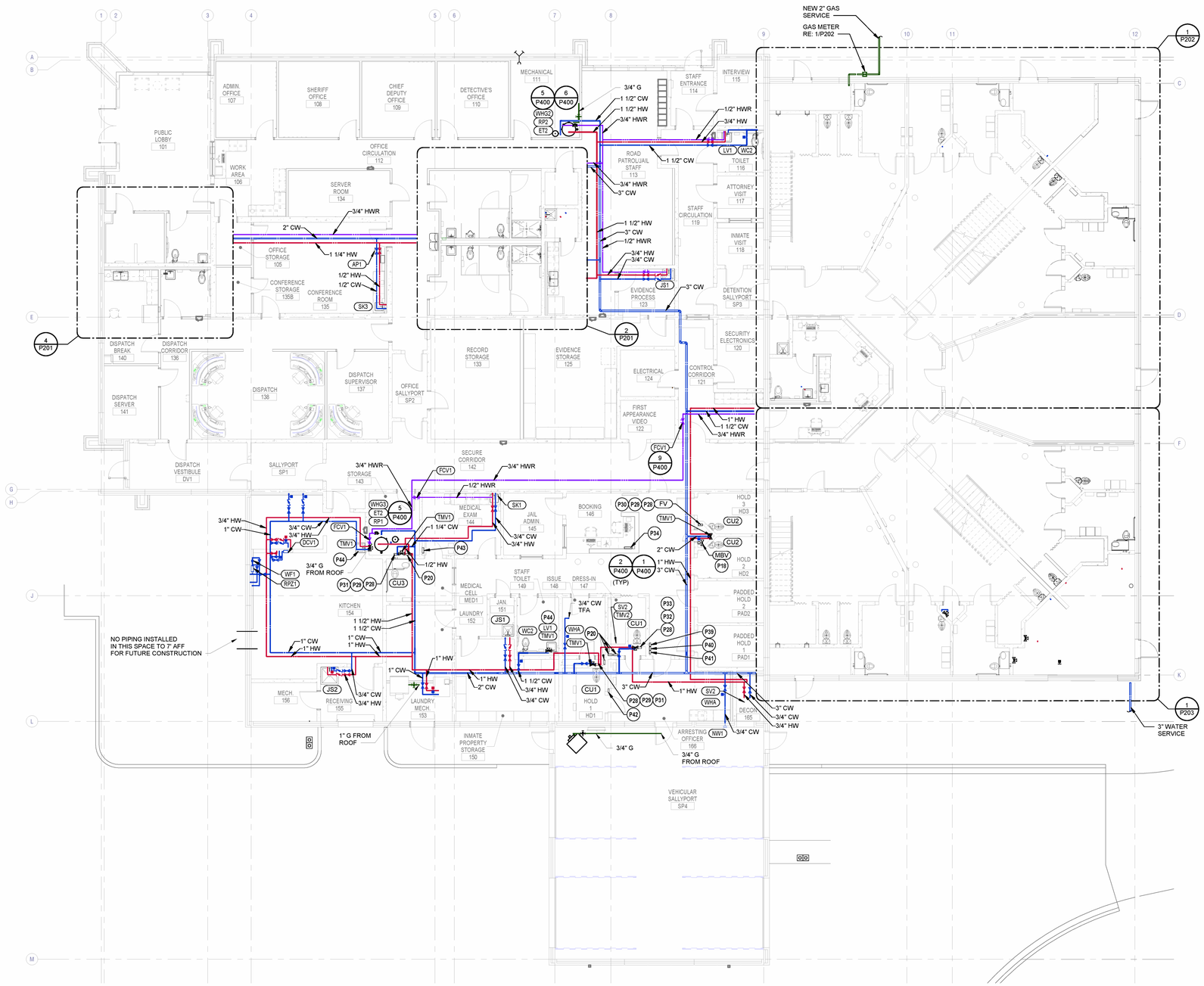

1 PLUMBING WATER & GAS FIRST FLOOR PLAN - OVERALL
1/8" = 1'-0"

PLUMBING PLAN NOTES:

P18 PROVIDE MOTORIZED BALL VALVES INSTALLED ON BOTH HOT AND COLD-WATER PIPING INSIDE CHASE TO SERVE PNEUMATIC CONTROLLER CONNECTED TO CELL PLUMBING FIXTURES. INSTALL CONTROLLER PER MANUFACTURE'S RECOMMENDATIONS. HOT WATER LOOP SHALL BE ROUTED WITHIN 24" OF FIXTURE CONNECTIONS. MOTORIZED BALL VALVES SHALL BE CONNECTED TO SECURITY SYSTEM AS REQUIRED. REFER TO SECURITY AND ELECTRICAL DRAWINGS FOR MORE INFORMATION.

P20 INSTALL FLUSH VALVE FURNISHED WITH "FFD" IN CHASE AT SAME ELEVATION OF COMBI FLUSH VALVE AND ATTACH TO WALL.

P28 INSTALL "CVC2" ELECTRONIC CONTROLLER AND ELECTRONIC VALVE ACTUATOR ON WALL AT 4'-0"AFF. FURNISH TRANSFORMER TO ELEC FOR INSTALLATION.

P29 PROVIDE 1/2"CW AND HW WITH SOV IN DROP AND CONNECT TO ELECTRONIC VALVE ACTUATOR.

P30 FEED (2) COMBI'S WITH HOT AND COLD PE TUBING FROM ELECTRONIC VALVE ACTUATOR ASSEMBLY.

P31 FEED (1) COMBI'S WITH HOT AND COLD PE TUBING FROM ELECTRONIC VALVE ACTUATOR ASSEMBLY.

P32 FEED (1) COMBI AND (1) SHOWER WITH HOT AND COLD PE TUBING FROM ELECTRONIC VALVE ACTUATOR.

P33 PROVIDE 1/2"CW AND 3/4"HW WITH SOV IN DROP AND CONNECT TO ELECTRONIC VALVE ACTUATOR.

P34 PROVIDE PC FURNISHED WITH ELECTRONIC CONTROLLED FIXTURES TO ELEC FOR INSTALLATION. ELEC TO PROVIDE CABLES FROM "CVC2" ELECTRONIC CONTROLLERS TO PC.

P39 INSTALL PIEZO ELECTRIC PUSH BUTTON INSIDE WALL, SERVING "FFD" IN PADDING HOLDING PD2.

P40 INSTALL PIEZO ELECTRIC PUSH BUTTON INSIDE WALL, SERVING "FFD" IN PADDING HOLDING PD1.

P41 INSTALL PIEZO ELECTRIC PUSH BUTTON INSIDE WALL, SERVING "FFD" IN CORRIDOR.

P42 INSTALL PIEZO ELECTRIC PUSH BUTTON ON WALL, SERVING "FFD" IN CORRIDOR.

P43 INSTALL PIEZO ELECTRIC PUSH BUTTON INSIDE WALL, SERVING "FFD" MEDICAL HOLDING MED1.

P44 ROUTE HOT AND COLD WATER PIPING DOWN IN WALL TO SERVE LAVATORY OR INDICATED FIXTURE. ROUTE HOT WATER WITHIN 6-INCHES OF PLUMBING FIXTURE STOP VALVE. LOOP HOT WATER / HOT WATER RETURN BACK UP WITHIN WALL.

HENDERSON ENGINEERS
8345 LENEXA DRIVE, SUITE 300
LENEXA, KS 66214
TEL 913.742.5000 FAX 913.742.5001
WWW.HENDERSONENGINEERS.COM
225004109
IL CORPORATE NO: 184-002965
EXPIRES 4/30/2025

EXPIRES ON: 11/30/2025

LICENSED PROFESSIONAL ENGINEER
SCOTT A. WALTER
062.075705
OF ILLINOIS

03/01/2024

HMN architects
7400 W. 110th Street, Suite 200
Overland Park, Kansas 66210
913.451.9075 phone
913.451.9080 fax
hmnarchitects.com

KLINGNER & ASSOCIATES, P.C.
Engineers • Architects • Surveyors
604 LIBERTY ST. SUITE 125
PELLA, IA 50219
515.612.7402
www.klingner.com

Henderson Engineers
8345 Lenexa Dr., Ste 300
Lenexa, Kansas 66214 913-742-5000
Chastain & Associates LLC
330 N. Central Ave.
Paris, IL 61944 217-465-5006

BID & PERMIT

EDGAR COUNTY PUBLIC SAFETY CENTER

EDGAR COUNTY, ILLINOIS
12636 950TH ROAD
PARIS, ILLINOIS 61944

21003.003

BID & PERMIT

Architect's Name
License # XXXXX
Date: 03/01/2024

⚠	Issue	Date

Drawn by: Author
Copyright © 2024 by HMN Architects, Inc.

PLUMBING WATER & GAS FIRST FLOOR PLAN - OVERALL

P103

SCOTT A. WALTER

PLUMBING PLAN NOTES:

P18 PROVIDE MOTORIZED BALL VALVES INSTALLED ON BOTH HOT AND COLD-WATER PIPING INSIDE CHASE TO SERVE PNEUMATIC CONTROLLER CONNECTED TO CELL PLUMBING FIXTURES. INSTALL CONTROLLER PER MANUFACTURE'S RECOMMENDATIONS. HOT WATER LOOP SHALL BE ROUTED WITHIN 24" OF FIXTURE CONNECTIONS. MOTORIZED BALL VALVES SHALL BE CONNECTED TO SECURITY SYSTEM AS REQUIRED. REFER TO SECURITY AND ELECTRICAL DRAWINGS FOR MORE INFORMATION.

P19 INSTALL MOTORIZED BALL VALVE ON WATER PIPE SERVING CELL FIXTURES PER OWNER REQUIREMENTS. REFER TO SECURITY AND ELECTRICAL DRAWINGS FOR MORE INFORMATION.

P28 INSTALL "CVC2" ELECTRONIC CONTROLLER AND ELECTRONIC VALVE ACTUATOR ON WALL AT 4'-0"AFF. FURNISH TRANSFORMER TO ELEC FOR INSTALLATION.

P29 PROVIDE 1/2"CW AND HW WITH SOV IN DROP AND CONNECT TO ELECTRONIC VALVE ACTUATOR.

P30 FEED (2) COMBI'S WITH HOT AND COLD PE TUBING FROM ELECTRONIC VALVE ACTUATOR ASSEMBLY.

P31 FEED (1) COMBI'S WITH HOT AND COLD PE TUBING FROM ELECTRONIC VALVE ACTUATOR ASSEMBLY.

P38 CONNECT HOT AND COLD WATER TO MIXING VALVE AS REQUIRED. ROUTE 1/2" TEMPERED WATER FROM MIXING VALVE TO COMBI UNIT A

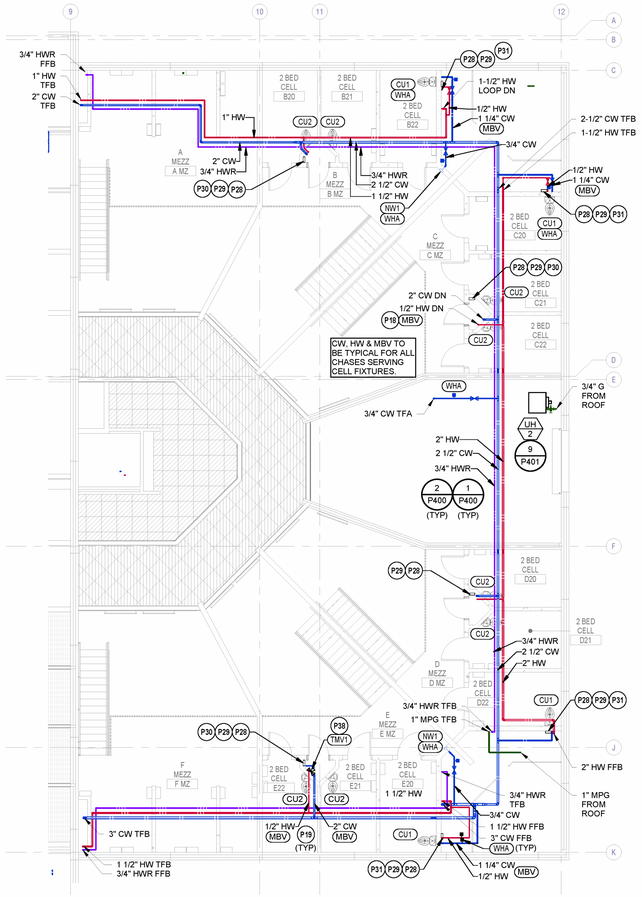

1 PLUMBING WATER & GAS MEZZANINE PLAN - JAIL
1/8" = 1'-0"

HENDERSON ENGINEERS
8345 LENEXA DRIVE, SUITE 300
LENEXA, KS 66214
TEL 913.742.5000 FAX 913.742.5001
WWW.HENDERSONENGINEERS.COM

225004109
IL CORPORATE NO: 184-002965
EXPIRES 4/30/2025

EXPIRES ON: 11/30/2025

LICENSED PROFESSIONAL ENGINEER
SCOTT A. WALTER
062.075705
OF ILLINOIS

03/01/2024

HMN architects
7400 W. 110th Street, Suite 200
Overland Park, Kansas 66210
913.451.9075 phone
913.451.9080 fax
hmnarchitects.com

KLINGNER & ASSOCIATES, P.C.
Engineers • Architects • Surveyors
604 LIBERTY ST, SUITE 125
PELLA, IA 50219
515.612.7402
www.klingner.com

Henderson Engineers
8345 Lenexa Dr., Ste 300
Lenexa, KS 66214 913.742.5000

Chastain & Associates LLC
330 N. Central Ave.
Paris, IL 61944 217.465.5006

BID & PERMIT

EDGAR COUNTY PUBLIC SAFETY CENTER

EDGAR COUNTY, ILLINOIS
12636 950TH ROAD
PARIS, ILLINOIS 61944

21003.003

BID & PERMIT

Architects Name
License #: XXXXX
Date: 03/01/2024

	Issue	Date

Drawn by: Author

Copyright © 2024 by HMN Architects, Inc.

PLUMBING WATER & GAS MEZZANINE PLAN - JAIL

P104

SCOTT A. WALTER

PLUMBING PLAN NOTES:

P21 NO VENT TERMINATION SHALL BE WITHIN 10 FEET OF ANY AIR-INTAKE

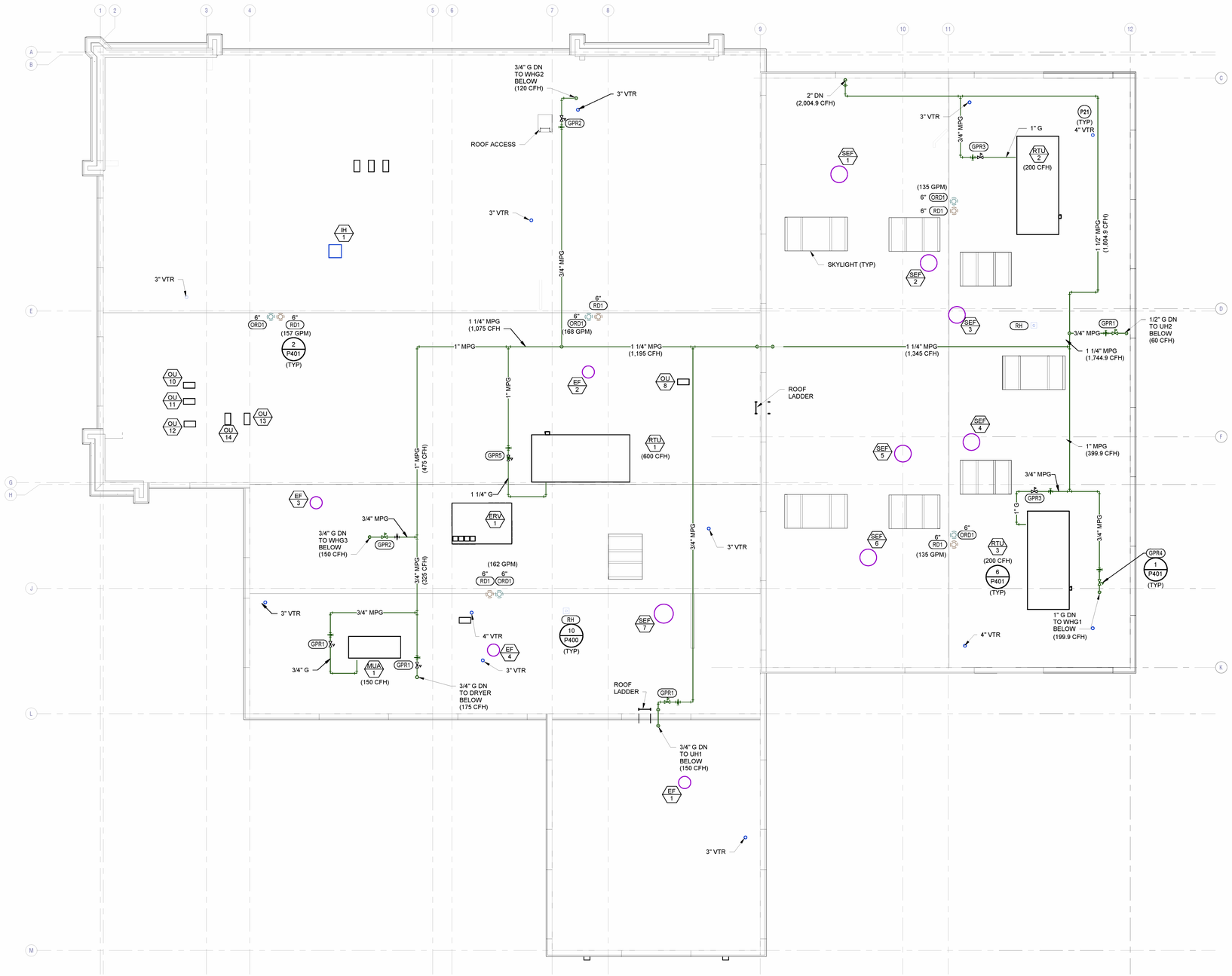

1 PLUMBING ROOF PLAN - OVERALL
1/8" = 1'-0"

HENDERSON ENGINEERS
8345 LENEXA DRIVE, SUITE 300
LENEXA, KS 66214
TEL 913.742.5000 FAX 913.742.5001
WWW.HENDERSONENGINEERS.COM
225004109
IL CORPORATE NO: 184-002965
EXPIRES 4/30/2025

EXPIRES ON: 11/30/2025

LICENSED PROFESSIONAL ENGINEER
SCOTT A. WALTER
062.075705
OF ILLINOIS

03/01/2024

HMN architects
7400 W. 110th Street, Suite 200
Overland Park, Kansas 66210
913.451.9075 phone
913.451.9080 fax
hmnarchitects.com

KLINGNER & ASSOCIATES, P.C.
Engineers • Architects • Surveyors
604 LIBERTY ST. SUITE 125
PELLA, IA 50219
515.612.7402
www.klingner.com

Henderson Engineers
8345 Lenexa Dr., Ste 300
Lenexa, KS 66214 913.742.5000

Chastain & Associates LLC
330 N. Central Ave.
Paris, IL 61944 217.465.5306

BID & PERMIT

EDGAR COUNTY PUBLIC SAFETY CENTER

EDGAR COUNTY, ILLINOIS
12636 950TH ROAD
PARIS, ILLINOIS 61944

21003.003

BID & PERMIT

Architects Name
License #: XXXXX
Date: 03/01/2024

⚠	Issue	Date

Drawn by: Author

Copyright © 2024 by HMN Architects, Inc.

PLUMBING ROOF PLAN - OVERALL

P105

SCOTT A. WALTER

PLUMBING PLAN NOTES:

P44 ROUTE HOT AND COLD WATER PIPING DOWN IN WALL TO SERVE LAVATORY OR INDICATED FIXTURE. ROUTE HOT WATER WITHIN 6-INCHES OF PLUMBING FIXTURE STOP VALVE. LOOP HOT WATER / HOT WATER RETURN BACK UP WITHIN WALL.

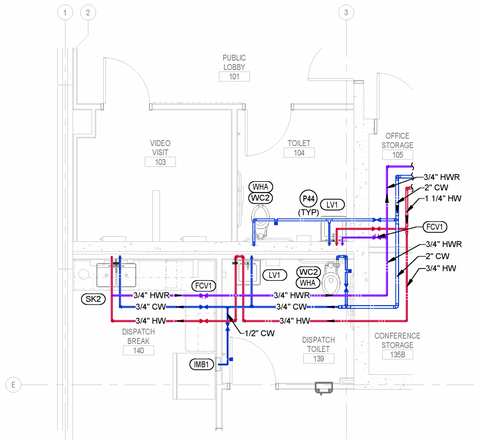

4 PLUMBING WATER & GAS ENLARGED PLAN - DISPATCH
1/4" = 1'-0"

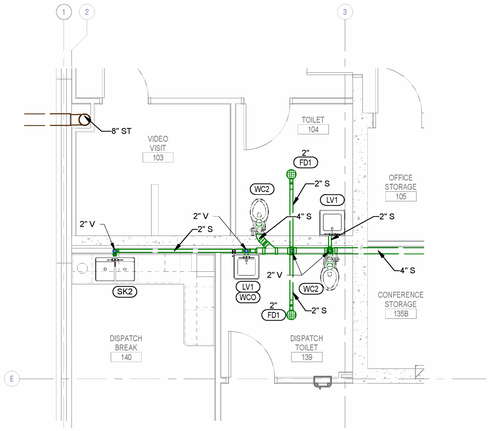

3 PLUMBING WASTE & VENT ENLARGED PLAN - DISPATCH
1/4" = 1'-0"

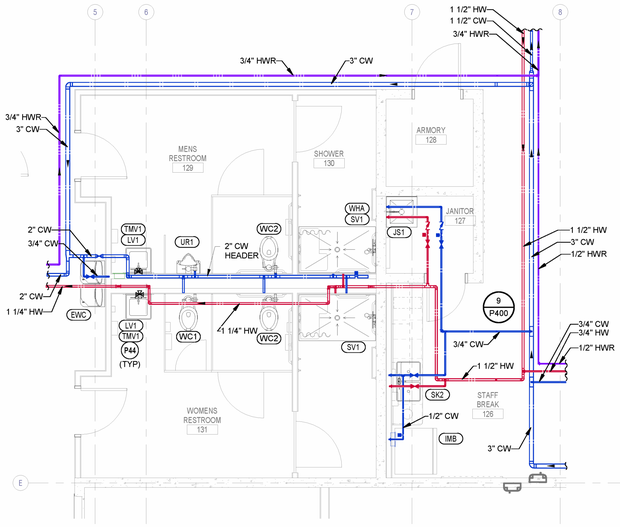

2 PLUMBING WATER & GAS ENLARGED PLAN - MAIN RESTROOMS
1/4" = 1'-0"

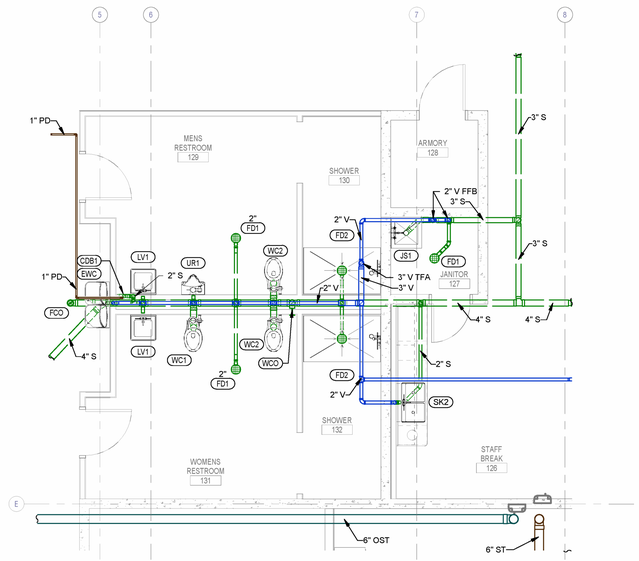

1 PLUMBING WASTE & VENT ENLARGED PLAN - MAIN RESTROOMS
1/4" = 1'-0"

HENDERSON ENGINEERS
8345 LENEXA DRIVE, SUITE 300
LENEXA, KS 66214
TEL 913.742.5000 FAX 913.742.5001
WWW.HENDERSONENGINEERS.COM
2250004109
IL CORPORATE NO.: 184-002965
EXPIRES 4/30/2025

EXPIRES ON: 11/30/2025

LICENSED PROFESSIONAL ENGINEER SCOTT A. WALTER 062.075705 OF ILLINOIS

03/01/2024

HMN architects
7400 W. 110th Street, Suite 200
Overland Park, Kansas 66210
913.451.9075 phone
913.451.9080 fax
hmnarchitects.com

KLINGNER & ASSOCIATES, P.C.
Engineers • Architects • Surveyors
604 LIBERTY ST, SUITE 125
PELLA, IA 50219
515.612.7402
www.klingner.com

Henderson Engineers
8345 Lenexa Dr., Ste 300
Lenexa, KS 66214 913.742.5000

Chastain & Associates LLC
330 N. Central Ave.
Paris, IL 61944 217-465-5006

BID & PERMIT

EDGAR COUNTY PUBLIC SAFETY CENTER

EDGAR COUNTY, ILLINOIS
12636 950TH ROAD
PARIS, ILLINOIS 61944

21003.003

BID & PERMIT

Architect's Name
License # XXXXX
Date: 03/01/2024

	Issue	Date

Drawn by: Author
Copyright © 2024 by HMN Architects, Inc.

PLUMBING PLANS - ENLARGED

P201

SCOTT A. WALTER

PLUMBING PLAN NOTES:

P23 STACK PIPING MOUNTED ALONG WALL. SECURE TO WALL AS REQUIRE PER SPECIFICATIONS.

P28 INSTALL "CVC2" ELECTRONIC CONTROLLER AND ELECTRONIC VALVE ACTUATOR ON WALL AT 4'-0"AFF. FURNISH TRANSFORMER TO ELEC FOR INSTALLATION.

P29 PROVIDE 1/2"CW AND HW WITH SOV IN DROP AND CONNECT TO ELECTRONIC VALVE ACTUATOR.

P30 FEED (2) COMBI'S WITH HOT AND COLD PE TUBING FROM ELECTRONIC VALVE ACTUATOR ASSEMBLY.

P31 FEED (1) COMBI'S WITH HOT AND COLD PE TUBING FROM ELECTRONIC VALVE ACTUATOR ASSEMBLY.

P32 FEED (1) COMBI AND (1) SHOWER WITH HOT AND COLD PE TUBING FROM ELECTRONIC VALVE ACTUATOR.

P33 PROVIDE 1/2"CW AND 3/4"HW WITH SOV IN DROP AND CONNECT TO ELECTRONIC VALVE ACTUATOR.

P34 PROVIDE PC FURNISHED WITH ELECTRONIC CONTROLLED FIXTURES TO ELEC FOR INSTALLATION. ELEC TO PROVIDE CABLES FROM "CVC2" ELECTRONIC CONTROLLERS TO PC.

P35 FEED (2) SHOWERS WITH HOT PE TUBING FROM HOT WATER TEMPERATURE ACTUATOR.

P36 PROVIDE 3/4"HW WITH SOV DROP AND CONNECT TO ELECTRONIC VALVE ACTUATOR.

P44 ROUTE HOT AND COLD WATER PIPING DOWN IN WALL TO SERVE LAVATORY OR INDICATED FIXTURE. ROUTE HOT WATER WITHIN 6-INCHES OF PLUMBING FIXTURE STOP VALVE. LOOP HOT WATER / HOT WATER RETURN BACK UP WITHIN WALL.

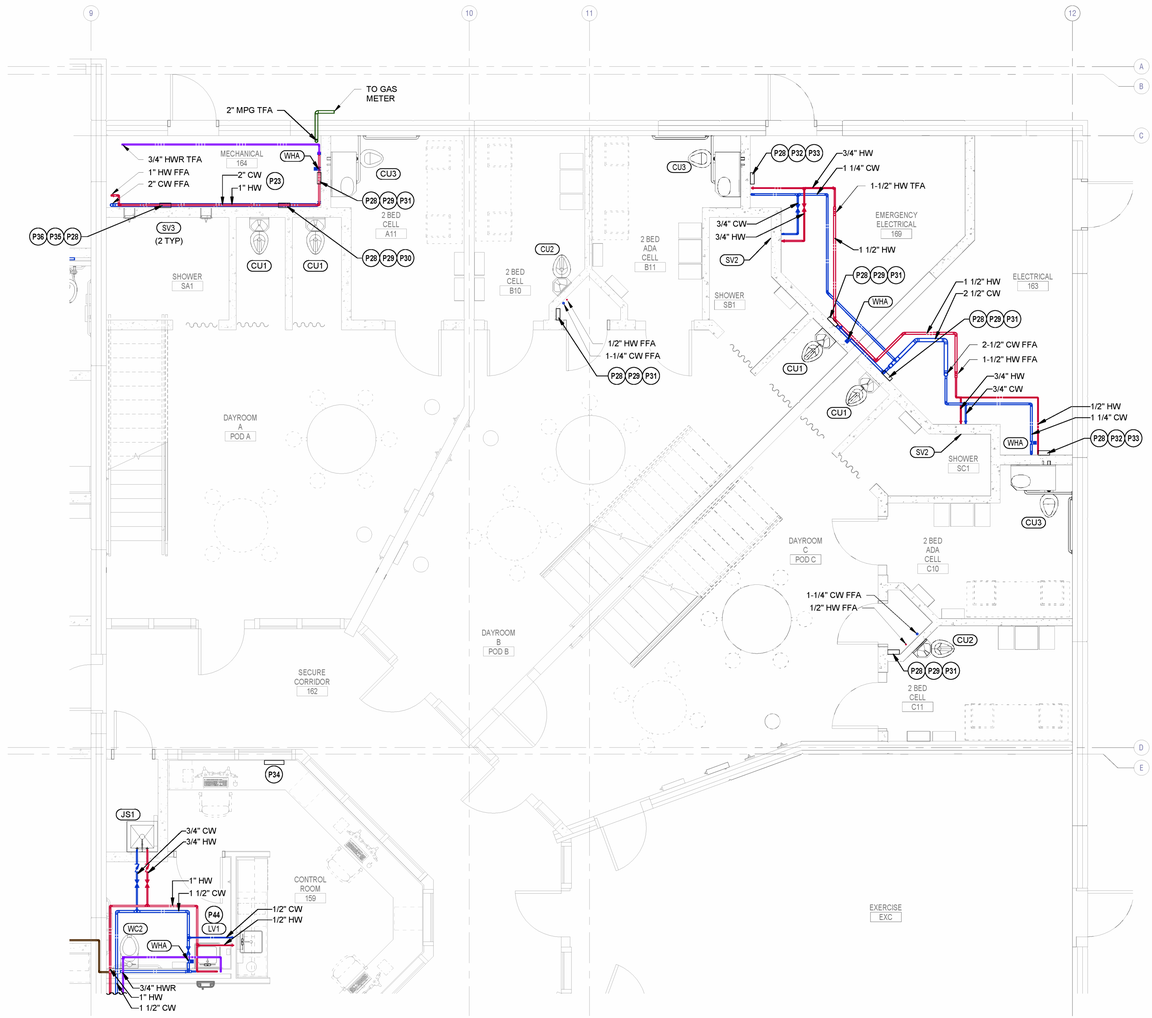

1 PLUMBING WATER & GAS - JAIL - NORTH
1/4" = 1'-0"

HENDERSON ENGINEERS
8345 LENEXA DRIVE, SUITE 300
LENEXA, KS 66214
TEL 913.742.5000 FAX 913.742.5001
WWW.HENDERSONENGINEERS.COM
2250004109
IL. CORPORATE NO: 184-002965
EXPIRES 4/30/2025

EXPIRES ON: 11/30/2025

LICENSED PROFESSIONAL ENGINEER SCOTT A. WALTER 062.075705 OF ILLINOIS

03/01/2024

HMN architects
7400 W. 110th Street, Suite 200
Overland Park, Kansas 66210
913.451.9075 phone
913.451.9080 fax
hmnarchitects.com

KLINGNER & ASSOCIATES, P.C.
Engineers • Architects • Surveyors
604 LIBERTY ST. SUITE 125
PELLA, IA 50219
515.612.7402
www.klingner.com

Henderson Engineers
8345 Lenexa Dr., Ste 300
Lenexa, KS 66214 913.742.5000

Chastain & Associates LLC
330 N. Central Ave.
Paris, IL 61944 217.465.5306

BID & PERMIT

EDGAR COUNTY PUBLIC SAFETY CENTER

EDGAR COUNTY, ILLINOIS
12636 950TH ROAD
PARIS, ILLINOIS 61944

21003.003

BID & PERMIT

Architect's Name
License #: XXXXX
Date: 03/01/2024

⚠	Issue	Date

Drawn by: Author
Copyright © 2024 by HMN Architects, Inc.

PLUMBING PLAN - ENLARGED - JAIL NORTH

P202

SCOTT A. WALTER

PLUMBING PLAN NOTES:

P19 INSTALL MOTORIZED BALL VALVE ON WATER PIPE SERVING CELL FIXTURES PER OWNER REQUIREMENTS. REFER TO SECURITY AND ELECTRICAL DRAWINGS FOR MORE INFORMATION.

P23 STACK PIPING MOUNTED ALONG WALL. SECURE TO WALL AS REQUIRE PER SPECIFICATIONS.

P28 INSTALL "CVC2" ELECTRONIC CONTROLLER AND ELECTRONIC VALVE ACTUATOR ON WALL AT 4'-0"AFF. FURNISH TRANSFORMER TO ELEC FOR INSTALLATION.

P29 PROVIDE 1/2"CW AND HW WITH SOV IN DROP AND CONNECT TO ELECTRONIC VALVE ACTUATOR.

P30 FEED (2) COMBI'S WITH HOT AND COLD PE TUBING FROM ELECTRONIC VALVE ACTUATOR ASSEMBLY.

P31 FEED (1) COMBI'S WITH HOT AND COLD PE TUBING FROM ELECTRONIC VALVE ACTUATOR ASSEMBLY.

P32 FEED (1) COMBI AND (1) SHOWER WITH HOT AND COLD PE TUBING FROM ELECTRONIC VALVE ACTUATOR.

P34 PROVIDE PC FURNISHED WITH ELECTRONIC CONTROLLED FIXTURES TO ELEC FOR INSTALLATION. ELEC TO PROVIDE CABLES FROM "CVC2" ELECTRONIC CONTROLLERS TO PC.

P35 FEED (2) SHOWERS WITH HOT PE TUBING FROM HOT WATER TEMPERATURE ACTUATOR.

P36 PROVIDE 3/4"HW WITH SOV DROP AND CONNECT TO ELECTRONIC VALVE ACTUATOR.

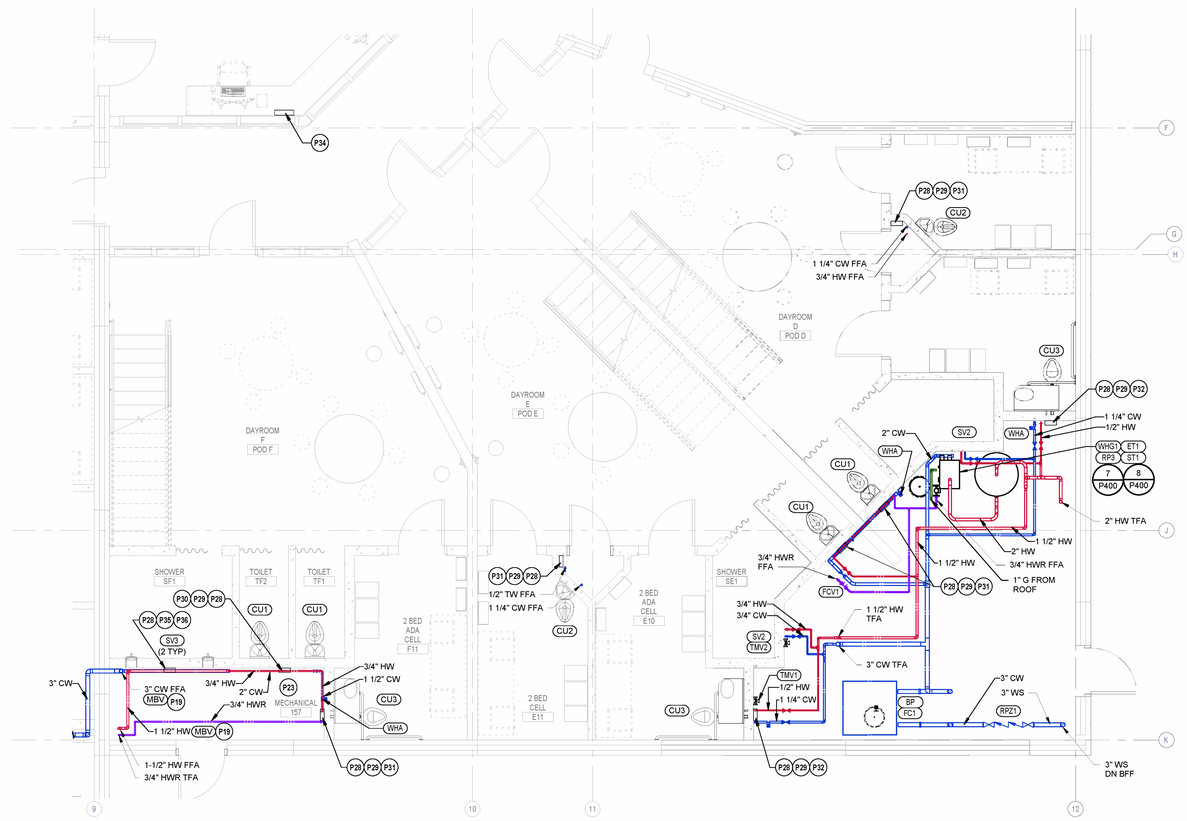

1 PLUMBING WATER & GAS - JAIL - SOUTH
1/4" = 1'-0"

HMN architects
7400 W. 110th Street, Suite 200
Overland Park, Kansas 66210
913.451.9075 phone
913.451.9080 fax
hmnarchitects.com

KLINGNER & ASSOCIATES, P.C.
Engineers • Architects • Surveyors
604 LIBERTY ST. SUITE 125
PELLA, IA 50219
515.612.7402
www.klingner.com

Henderson Engineers
8345 Lenexa Dr., Ste 300
Lenexa, KS 66214 913.742.5000

Chastain & Associates LLC
330 N. Central Ave.
Paris, IL 61944 217.465.5306

BID & PERMIT

EDGAR COUNTY PUBLIC SAFETY CENTER

EDGAR COUNTY, ILLINOIS
12636 950TH ROAD
PARIS, ILLINOIS 61944

21003.003

BID & PERMIT

Architect's Name
License #: XXXXX
Date: 03/01/2024

	Issue	Date

Drawn by: Author

Copyright © 2024 by HMN Architects, Inc.

PLUMBING PLAN - ENLARGED - JAIL SOUTH

P203

HENDERSON ENGINEERS
8345 LENEXA DRIVE, SUITE 300
LENEXA, KS 66214
TEL 913.742.5000 FAX 913.742.5001
WWW.HENDERSONENGINEERS.COM
2250004109
IL CORPORATE NO: 184-002965
EXPIRES 4/30/2025

EXPIRES ON: 11/30/2025

LICENSED PROFESSIONAL ENGINEER
SCOTT A. WALTER
062.075705
STATE OF ILLINOIS

03/01/2024

SCOTT A. WALTER

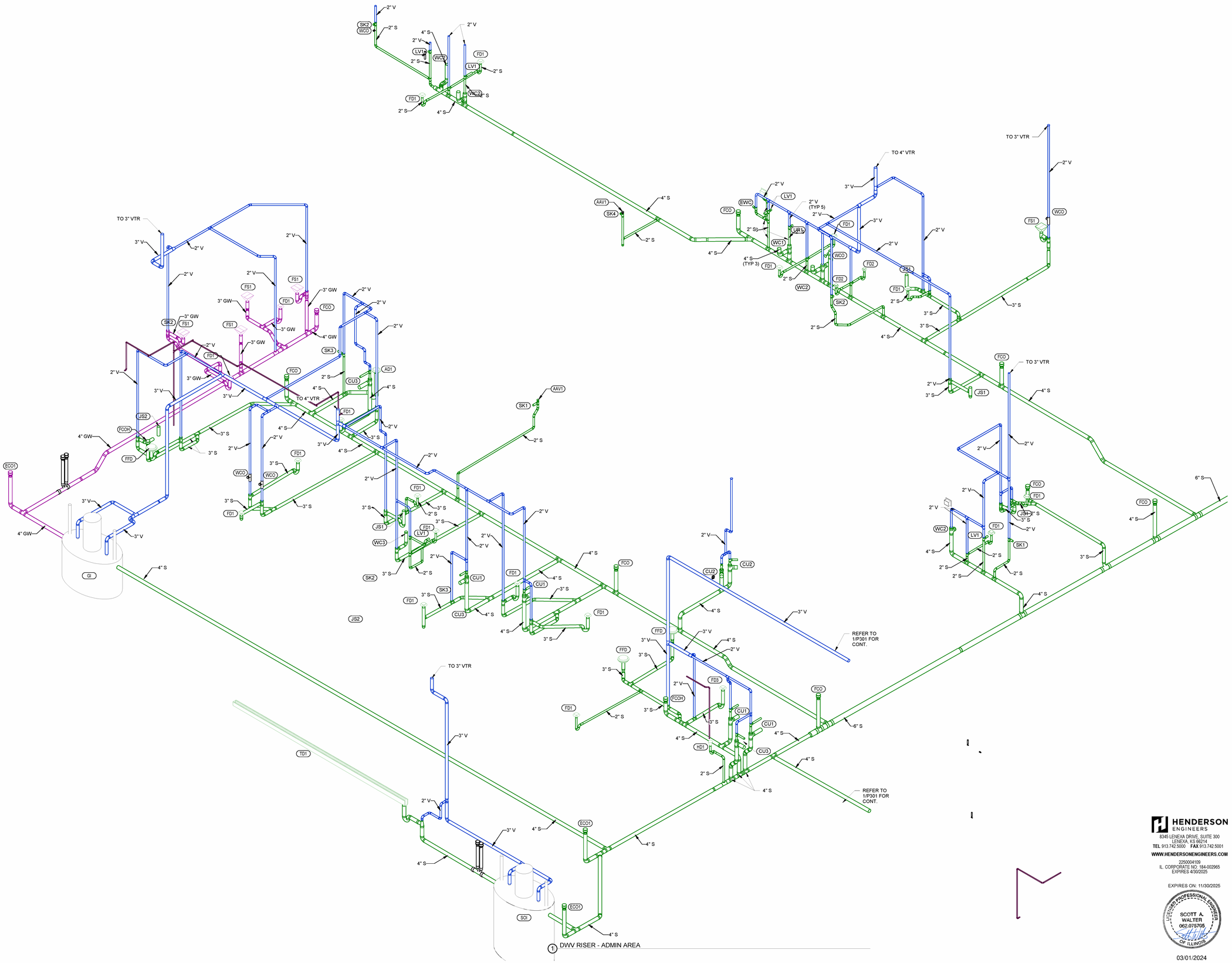

1 DWV RISER - ADMIN AREA

HENDERSON ENGINEERS
8345 LENEXA DRIVE, SUITE 300
LENEXA, KS 66214
TEL 913.742.5000 FAX 913.742.5001
WWW.HENDERSONENGINEERS.COM
2250004109
IL CORPORATE NO: 184-002965
EXPIRES 4/30/2025

EXPIRES ON: 11/30/2025

LICENSED PROFESSIONAL ENGINEER
SCOTT A. WALTER
062.075705
OF ILLINOIS

03/01/2024

HMN architects
7400 W. 110th Street, Suite 200
Overland Park, Kansas 66210
913.451.9075 phone
913.451.9080 fax
hmnarchitects.com

KLINGNER & ASSOCIATES, P.C.
Engineers • Architects • Surveyors
604 LIBERTY ST, SUITE 125
PELLA, IA 50219
515.612.7402
www.klingner.com

Henderson Engineers
8345 Lenexa Dr., Ste 300
Lenexa, KS 66214 913.742.5000

Chastain & Associates LLC
330 N. Cenntral Ave.
Paris, IL 61944 217-465-5306

BID & PERMIT

EDGAR COUNTY PUBLIC SAFETY CENTER

EDGAR COUNTY, ILLINOIS
12636 950TH ROAD
PARIS, ILLINOIS 61944

21003.003

BID & PERMIT

Architect's Name
License #: XXXXX
Date: 03/01/2024

⚠	Issue	Date

Drawn by: Author

Copyright © 2024 by HMN Architects, Inc.

PLUMBING RISER DIAGRAMS

P300

SCOTT A. WALTER

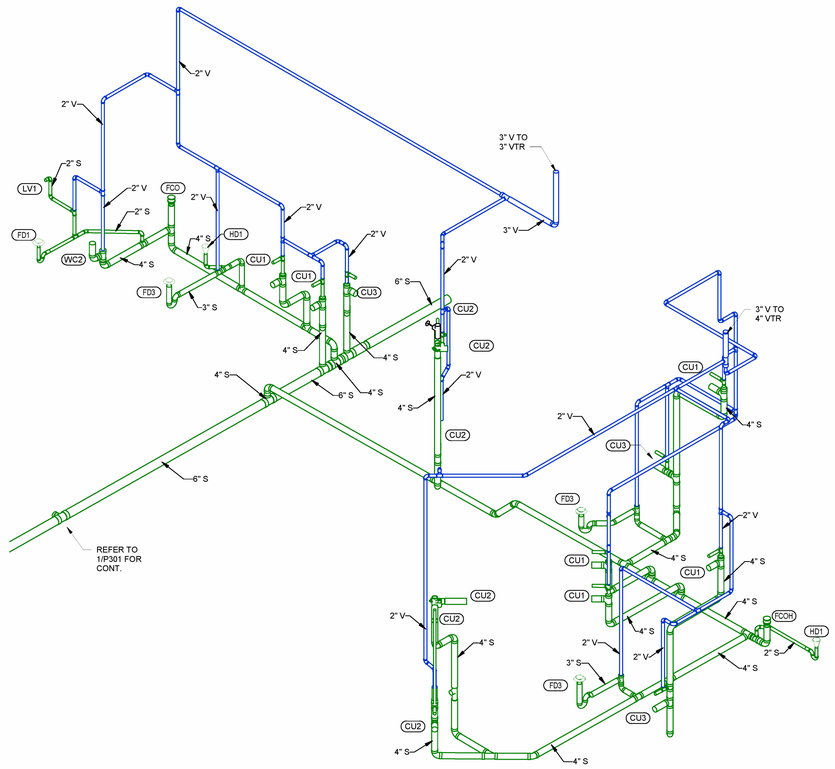

2 DWV RISER - CELL AREA NORTH

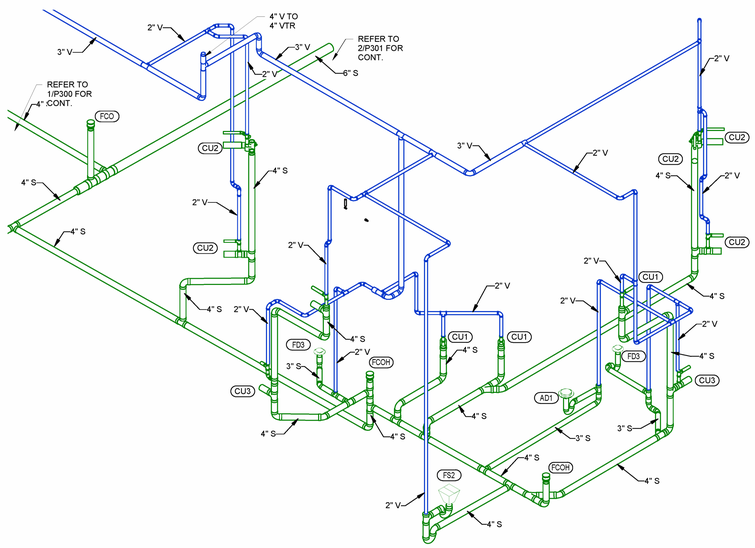

1 DWV RISER - CELL AREA SOUTH

HENDERSON ENGINEERS
8345 LENEXA DRIVE, SUITE 300
LENEXA, KS 66214
TEL 913.742.5000 **FAX** 913.742.5001
WWW.HENDERSONENGINEERS.COM

2250004109
IL. CORPORATE NO: 184-002965
EXPIRES 4/30/2025

EXPIRES ON: 11/30/2025

LICENSED PROFESSIONAL ENGINEER
SCOTT A. WALTER
062.075705
OF ILLINOIS

03/01/2024

HMN architects
7400 W. 110th Street, Suite 200
Overland Park, Kansas 66210
913.451.9075 phone
913.451.9080 fax
hmnarchitects.com

KLINGNER & ASSOCIATES, P.C.
Engineers • Architects • Surveyors
604 LIBERTY ST, SUITE 125
PELLA, IA 50219
515.612.7402
www.klingner.com

Henderson Engineers
8345 Lenexa Dr., Ste 300
Lenexa, KS 66214 913.742.5000

Chastain & Associates LLC
330 N. Central Ave.
Paris, IL 61944 217.465.5306

BID & PERMIT

EDGAR COUNTY PUBLIC SAFETY CENTER

EDGAR COUNTY, ILLINOIS
12636 950TH ROAD
PARIS, ILLINOIS 61944

21003.003

BID & PERMIT

Architect's Name
License #: XXXXX
Date: 03/01/2024

	Issue	Date

Drawn by: Author

Copyright © 2024 by HMN Architects, Inc.

PLUMBING RISER DIAGRAMS

P301

SCOTT A. WALTER

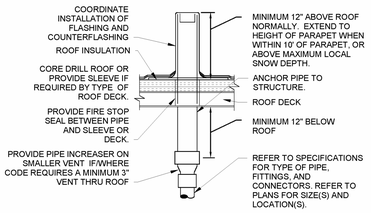

LOCATE VTR MINIMUM THREE FEET FROM PROPERTY LINE, TEN FEET HORIZONTAL OR THREE FEET VERTICAL ABOVE ANY BUILDING OPENING OR FRESH AIR INTAKE, TWENTY FIVE FEET FROM ANY OPENING OR FRESH AIR INTAKE IN MEDICAL FACILITIES AND ONE FOOT FROM ANY VERTICAL SURFACE. REFER TO LOCAL CODES FOR OTHER VENT TERMINATION REQUIREMENTS. LOCATE VTR MINIMUM 18" FROM ADJACENT WALL, PARAPET, EXPANSION JOINT, ROOF DRAIN, EQUIPMENT CURB, OR OTHER ROOF FEATURE. OFFSET IN CEILING SPACE WHERE REQUIRED TO MEET THESE CONDITIONS. INSULATE LAST SIX FEET OF VENT PIPE INSIDE BUILDING PER SPECIFICATIONS.

v1.00

12 VENT THRU ROOF
NTS

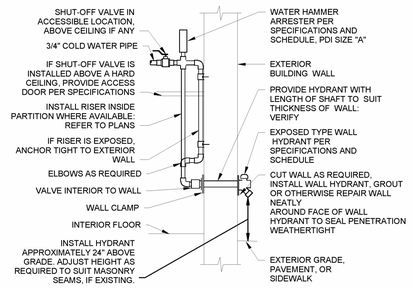

ARRANGEMENT SHOWN IS SCHEMATIC. ADJUST AS REQUIRED TO SUIT FIELD CONDITIONS. INSTALL PER MANUFACTURER'S INSTRUCTIONS. IN NON-FREEZING CLIMATES, PIPE MAY BE INSTALLED CONCEALED IN EXTERIOR WALL RATHER THAN EXTERIOR TO WALL AS SHOWN. REFER TO PLANS FOR LOCATION.

v1.00

11 WALL HYDRANT INSTALLATION
NTS

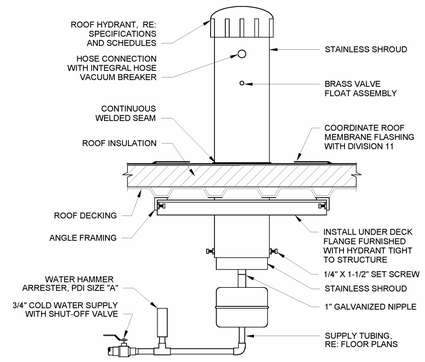

PIPING ARRANGEMENT SHOWN IS SCHEMATIC, ADJUST TO SUIT FIELD CONDITIONS. RE: FLOOR PLANS FOR LOCATION.

v1.00

10 ROOF HYDRANT DETAIL
NTS

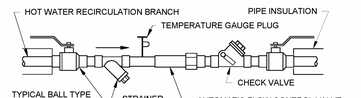

REFER TO SPECIFICATIONS, SCHEDULES, AND NOTES FOR MORE INFORMATION. MAKE CONNECTIONS AND PROVIDE INSTALLATION PER MANUFACTURER'S RECOMMENDATIONS. ARRANGEMENT SHOWN IS SCHEMATIC. PROVIDE REDUCERS AND ADAPTERS AS REQUIRED.

v1.00

9 AUTOMATIC FLOW CONTROL VALVE TRAIN
NTS

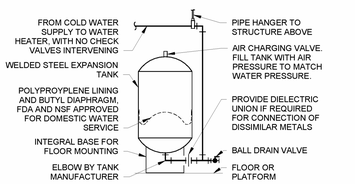

PIPING ARRANGEMENT SHOWN IS SCHEMATIC. ADJUST TO SUIT FIELD CONDITIONS. MAKE PIPE SAME SIZE AS TANK FITTING. FOLLOW MANUFACTURER'S INSTRUCTIONS FOR INSTALLATION PROCEDURE. VERIFY PROPER OPERATION WHEN INSTALLED. PROVIDE SEISMIC STRAP OR BRACING WHEN REQUIRED BY LOCAL AUTHORITIES.

8 LARGE EXPANSION TANK
NTS

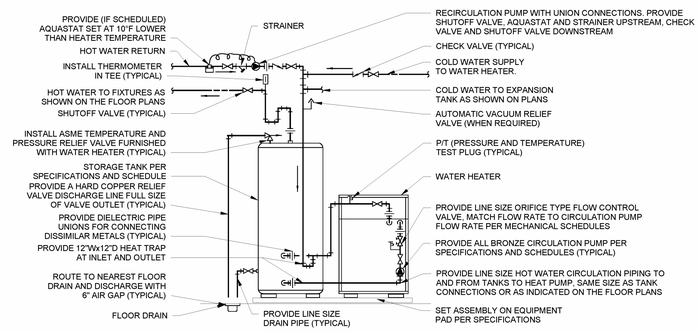

NOTE: REFER TO SPECIFICATIONS, SCHEDULES AND NOTES FOR MORE INFORMATION. PIPING ARRANGEMENT SHOWN IS SCHEMATIC. VERIFY ALL CONNECTION SIZES AND LOCATIONS PER MANUFACTURES REQUIREMENTS ADJUST TO SUIT FIELD CONDITIONS. REFER TO FLOOR PLANS FOR PIPE SIZES. PROVIDE SEISMIC STRAP OR BRACING IF/AS REQUIRED BY LOCAL AUTHORITIES. PROVIDE AUTOMATIC VACUUM RELIEF VALVE WHEN REQUIRED BY LOCAL AUTHORITIES. INTERLOCK OF AQUASTAT WITH RECIRCULATION PUMP BY ELECTRICAL. REFER TO MECHANICAL FOR CONTROL OF CIRCULATION PUMP.

7 SINGLE STORAGE TANK AND WATER HEATER
NTS

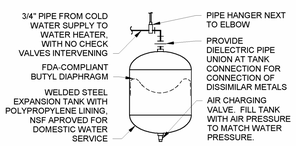

PIPING ARRANGEMENT SHOWN IS SCHEMATIC. ADJUST TO SUIT FIELD CONDITIONS. FOLLOW MANUFACTURER'S INSTRUCTIONS FOR INSTALLATION PROCEDURE. VERIFY PROPER OPERATION WHEN INSTALLED. PROVIDE SEISMIC STRAP OR BRACING WHEN REQUIRED BY LOCAL AUTHORITIES.

6 SMALL EXPANSION TANK
NTS

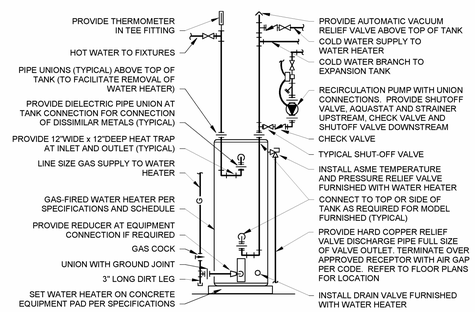

REFER TO SPECIFICATIONS, SCHEDULES, AND NOTES FOR MORE INFORMATION. PIPING ARRANGEMENT SHOWN IS SCHEMATIC; ADJUST TO SUIT FIELD CONDITIONS. VERIFY CONNECTION SIZES AND LOCATIONS WITH WATER HEATER FURNISHED. REFER TO FLOOR PLANS FOR PIPE SIZES AND CONTINUATIONS. PROVIDE SEISMIC STRAP OR BRACING AND FLEXIBLE CONNECTORS ON PIPE WHEN REQUIRED BY LOCAL AUTHORITIES. PROVIDE HEAT TRAP ON COLD WATER SUPPLY WHEN REQUIRED BY LOCAL AUTHORITIES. POWER WIRING AND DISCONNECT SWITCH ARE SPECIFIED BY ELECTRICAL. INTERLOCK OF AQUASTAT WITH RECIRCULATION PUMP IS SPECIFIED BY ELECTRICAL.

5 GAS FIRED WATER HEATER AND PUMP
NTS

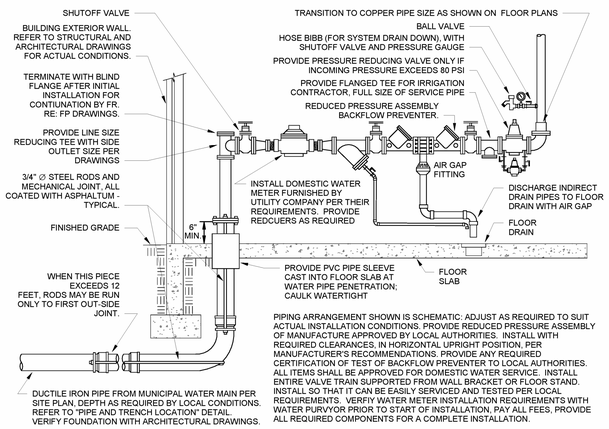

PIPING ARRANGEMENT SHOWN IS SCHEMATIC: ADJUST AS REQUIRED TO SUIT ACTUAL INSTALLATION CONDITIONS. PROVIDE REDUCED PRESSURE ASSEMBLY OF MANUFACTURE APPROVED BY LOCAL AUTHORITIES. INSTALL WITH REQUIRED CLEARANCES, IN HORIZONTAL UPRIGHT POSITION, PER MANUFACTURER'S RECOMMENDATIONS. PROVIDE ANY REQUIRED CERTIFICATION OF TEST OF BACKFLOW PREVENTER TO LOCAL AUTHORITIES. ALL ITEMS SHALL BE APPROVED FOR DOMESTIC WATER SERVICE. INSTALL ENTIRE VALVE TRAIN SUPPORTED FROM WALL BRACKET OR FLOOR STAND. INSTALL SO THAT IT CAN BE EASILY SERVICED AND TESTED PER LOCAL REQUIREMENTS. VERFIY WATER METER INSTALLATION REQUIREMENTS WITH WATER PURVYOR PRIOR TO START OF INSTALLATION, PAY ALL FEES, PROVIDE ALL REQUIRED COMPONENTS FOR A COMPLETE INSTALLATION.

v1.00

4 COMBINED FIRE AND DOMESTIC WATER SERVICE ENTRY - 2-1/2" AND LARGER
NTS

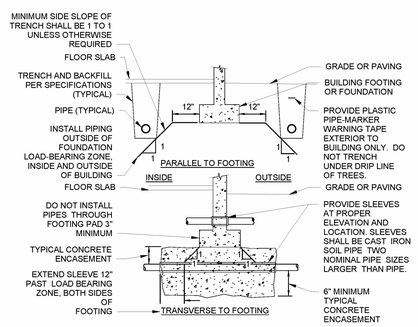

VERIFY EXCAVATION CONDITIONS (SOIL/ROCK) WITH GEOTECHNICAL REPORT AND/OR SITE INVESTIGATIONS. REFER TO SPECIFICATIONS FOR OTHER CONDITIONS. DO NOT INSTALL PIPES UNDER INTERIOR BUILDING SPREAD FOOTINGS OR PILE CAPS. COORDINATE WITH AFFECTED CONTRACTORS PRIOR TO THE START OF WORK.

v1.00

3 PIPE AND TRENCH LOCATION
NTS

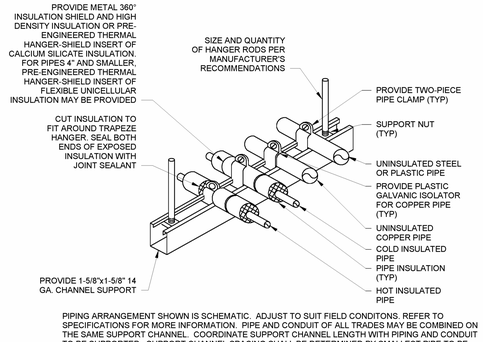

PIPING ARRANGEMENT SHOWN IS SCHEMATIC. ADJUST TO SUIT FIELD CONDITIONS. REFER TO SPECIFICATIONS FOR MORE INFORMATION. PIPE AND CONDUIT OF ALL TRADES MAY BE COMBINED ON THE SAME SUPPORT CHANNEL. COORDINATE SUPPORT CHANNEL LENGTH WITH PIPING AND CONDUIT TO BE SUPPORTED. SUPPORT CHANNEL SPACING SHALL BE DETERMINED BY SMALLEST PIPE TO BE SUPPORTED. CHANNEL SUPPORT MAY BE USED AS A WALL BRACKET, ATTACH TO WALL WITH ANCHOR BOLTS PER SPECIFICATIONS. FOR HORIZONTAL INSULATED PIPING, ATTACH CLAMPS AS INDICATED ABOVE; FOR VERTICAL INSULATED PIPING, ATTACH CLAMPS TO THE PIPE AND SEAL INSULATION AT BOTH CLAMP ENDS.

v1.00

2 TRAPEZE PIPE HANGER
NTS

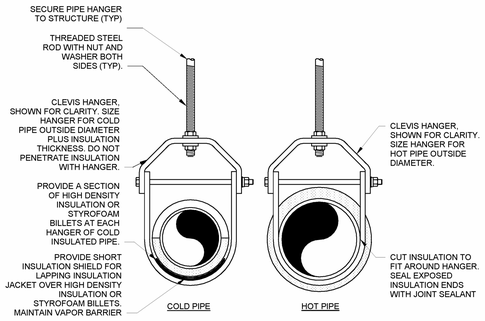

REFER TO SPECIFICATIONS FOR INSULATION TYPES, INSULATION THICKNESSES, HANGER TYPES, HANGER ROD CONNECTIONS TO STRUCTURE AND HANGER SPACING.

1 PIPE HANGER DETAIL
NTS

HENDERSON ENGINEERS
8345 LENEXA DRIVE, SUITE 300
LENEXA, KS 66214
TEL 913.742.5000 FAX 913.742.5001
WWW.HENDERSONENGINEERS.COM
FIRM
2250004106
IL CORPORATE NO.: 184-002965
EXPIRES 4/30/2025

EXPIRES ON: 11/30/2025

LICENSED PROFESSIONAL ENGINEER
SCOTT A. WALTER
062-070705
STATE OF ILLINOIS

03/01/2024

HMN architects
7400 W. 110th Street, Suite 200
Overland Park, Kansas 66210
913.451.9075 phone
913.451.9080 fax
hmnarchitects.com

KLINGNER & ASSOCIATES, P.C.
Engineers • Architects • Surveyors
604 LIBERTY ST, SUITE 125
PELLA, IA 50219
515.612.7402
www.klingner.com

Henderson Engineers
8345 Lenexa Dr., Ste 300
Lenexa, KS 66214 913.742.5000
Chastain & Associates LLC
330 N. Central Ave.
Paola, KS 66064 - 210-465-5006

BID & PERMIT

EDGAR COUNTY PUBLIC SAFETY CENTER

EDGAR COUNTY, ILLINOIS
12636 950TH ROAD
PARIS, ILLINOIS 61944

21003.003

BID & PERMIT

Architect's Name
License #: XXXX
Date: 03/01/2024

#	Issue	Date

Drawn by: Author

Copyright © 2024 by HMN Architects, Inc.

PLUMBING DETAILS

P400

SCOTT A. WALTER

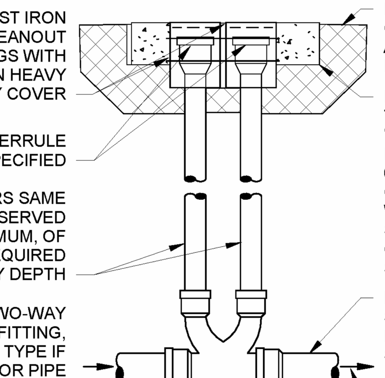

LOCATE EXTERIOR TWO-WAY CLEANOUT AT EXIT OF BUILDING DRAINS AND WHERE SHOWN ON PLAN. REFER TO SPECIFICATIONS AND SCHEDULES FOR MORE INFORMATION.

(12) EXTERIOR TWO-WAY CLEANOUT
NTS

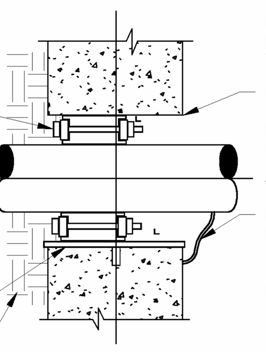

REFER TO SPECIFICATIONS FOR FURTHER INFORMATION.
COORDINATE INSTALLATION WITH GENERAL CONTRACTOR.

(11) BELOW GRADE PENETRATION OF EXTERIOR WALL
NTS

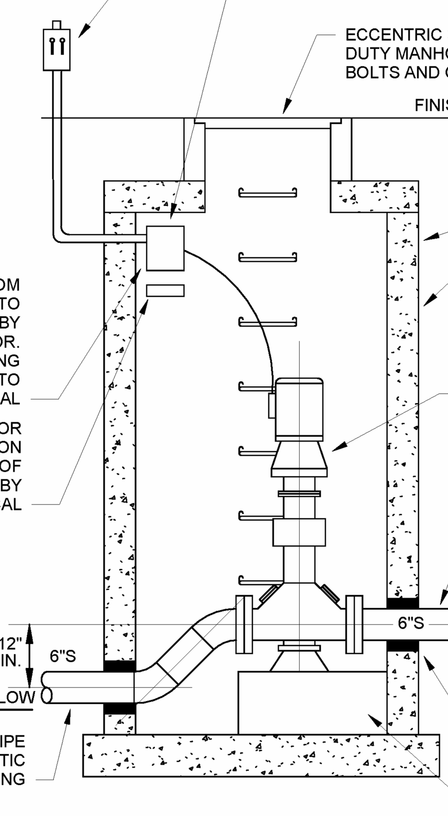

PIPING ARRANGMENT SHOW IS SCHEMATIC, ADJUST TO SUIT FILED CONDITIONS. REFER TO SPECIFICATIONS FOR MORE INFORMATION.

v1.02

(10) OUTDOOR SEWAGE GRINDER
NTS

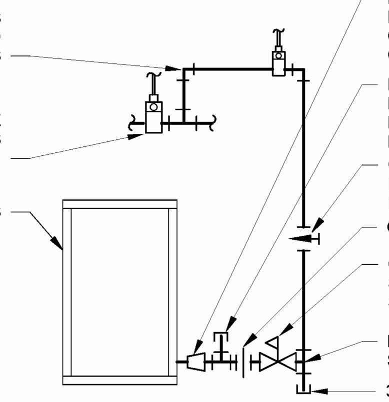

ARRANGEMENT SHOWN IS SCHEMATIC. ADJUST TO SUIT FIELD CONDITIONS. PROVIDE CONNECTIONS SHOWN IN EQUIPMENT MANUFACTURER'S INSTALLATION INSTRUCTIONS. VERIFY CONNECTION LOCATIONS BEFORE INSTALLING PIPE RUNS. REFER TO SPECIFICATIONS FOR PIPE AND FITTING MATERIALS AND INSTALLATION. FOR PIPE SIZE(S) REFER TO FLOOR PLANS, PROVIDE GAS COCK, UNION, AND DIRT LEG SAME SIZE AS BRANCH.

v1.00

(9) GAS HEATER CONNECTION
NTS

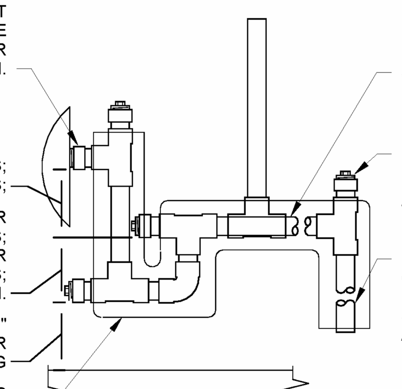

ARRANGEMENT SHOWN IS SCHEMATIC. ADJUST TO SUIT FIELD CONDITIONS. PROVIDE CONNECTIONS SHOWN IN EQUIPMENT MANUFACTURER'S INSTALLATION INSTRUCTIONS. REFER TO SPECIFICATIONS FOR PIPE AND FITTING MATERIALS AND INSTALLATION. PROVIDE DIELECTRIC UNION IF CONNECTING DISSIMILAR METALS. AT MOTORIZED EQUIPMENT ABOVE CEILING, PROVIDE NEOPRENE TUBE AND STAINLESS STEEL SCREW CLAMPS FOR FLEXIBLE CONNECTION. FOR PIPE SIZE(S) REFER TO FLOOR PLANS, OR CODE REQUIREMENTS FOR HVAC UNIT TONNAGE. PROVIDE HANGERS OR SUPPORTS PER SPECIFICATIONS. DO NOT COMBINE CONDENSATE DRAIN PIPES WITH NON-CONDENSATE INDIRECT DRAINS.

v1.00

(8) CONDENSATE DRAIN INSTALLATION
NTS

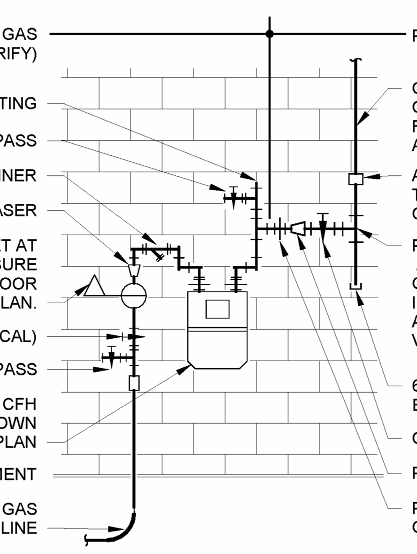

VERIFY REQUIREMENTS FOR METERING AND PIPING WITH GAS COMPANY. COORDINATE WITH GAS COMPANY WITH REGARD TO INSTALLATION OF OTHER PLUMBING UTILITIES IN VICINITY, IF ANY. APPLY FOR AND PAY GAS COMPANY FEES FOR INSTALLATION. USE WELDED OR SCREWED PIPE AND FITTINGS PER PLUMBING SPECIFICATIONS.

v1.00

(7) GAS METER SETTING
NTS

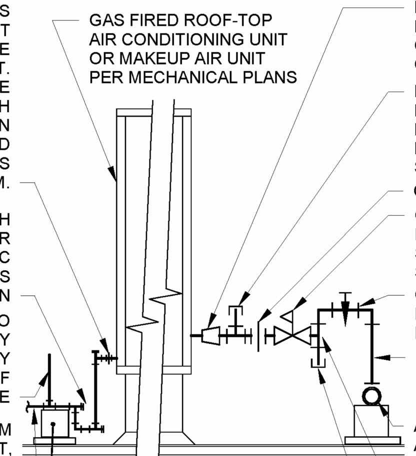

ARRANGEMENT SHOWN IS SCHEMATIC. ADJUST TO SUIT FIELD CONDITIONS. PROVIDE CONNECTIONS SHOWN IN EQUIPMENT MANUFACTURER'S INSTALLATION INSTRUCTIONS. VERIFY CONNECTION LOCATIONS BEFORE INSTALLING PIPE RUNS. REFER TO SPECIFICATIONS FOR PIPE AND FITTING MATERIALS AND INSTALLATION. PROVIDE DIELECTRIC UNION IF CONNECTING DISSIMILAR METALS. FOR PIPE SIZE(S) REFER TO FLOOR PLANS, OR CODE REQUIREMENTS FOR HVAC UNIT TONNAGE. PROVIDE GAS COCK, UNION AND DIRT LEG SAME SIZE AS BRANCH PIPE. SLOPE CONDENSATE PIPE AS MUCH AS POSSIBLE TOWARD DISCHARGE, 2% MINIMUM. PROVIDE CLEANOUTS IN ENDS AND TURNS OF PIPE PER LOCAL CODE REQUIREMENTS: ADAPTER WITH THREADED CLEANOUT PLUG. PROVIDE MINIMUM 6" CLEARANCE TO ROOF UNDER PIPES.

v1.00

(6) CONNECTIONS TO ROOF-TOP UNIT
NTS

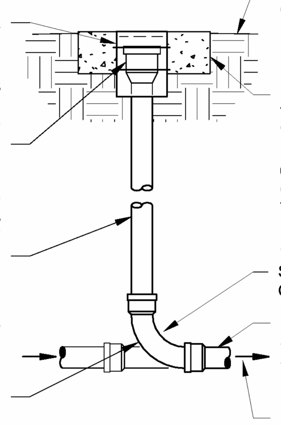

LOCATE EXTERIOR CLEANOUTS AT ENDS OF RUNS, AT TURNS OF PIPE GREATER THAN 45 DEGREES, AT MINIMUM 75 FOOT INTERVALS ON STRAIGHT RUNS, AND WHERE SHOWN ON PLANS. PROVIDE EARTH BACKFILL AND COMPACTION PER ARCHITECTURAL SPECIFICATIONS. REFER TO SPECIFICATIONS AND SCHEDULES FOR MORE INFORMATION.

v1.00

(5) EXTERIOR CLEANOUT
NTS

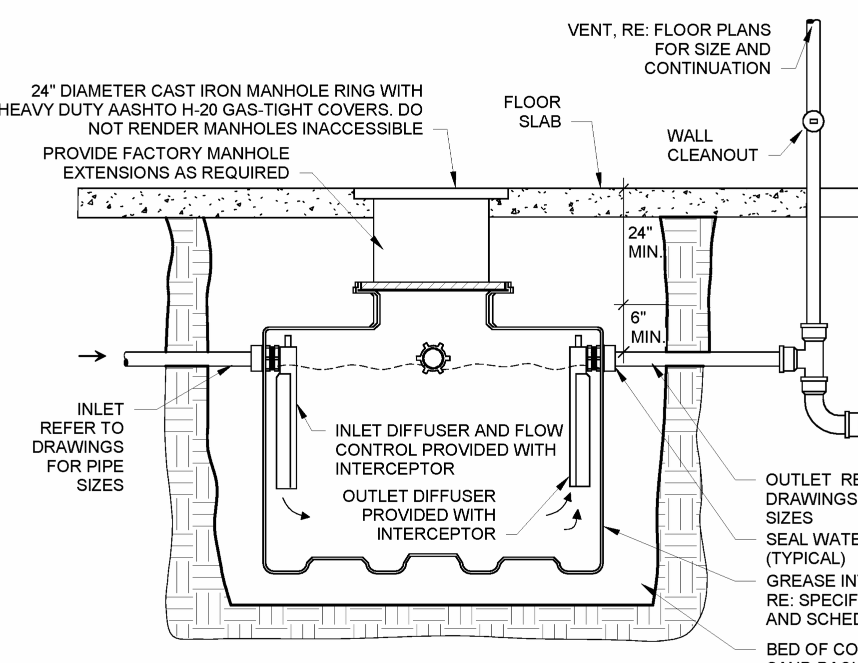

PIPING ARRANGEMENT SHOWN IN SCHEMATIC. ADJUST TO SUIT FIELD CONDITIONS.
SUBMIT PROPOSED GREASE INTERCEPTOR INSTALLATION PLANS AND SPECIFICATIONS TO LOCAL AUTHORITIES FOR THEIR APPROVAL BEFORE ACQUISITION OF INTERCEPTOR. PROVIDE CAPACITY AS REQUIRED BY LOCAL AUTHORITIES.

v1.00

(4) GREASE INTERCEPTOR
NTS

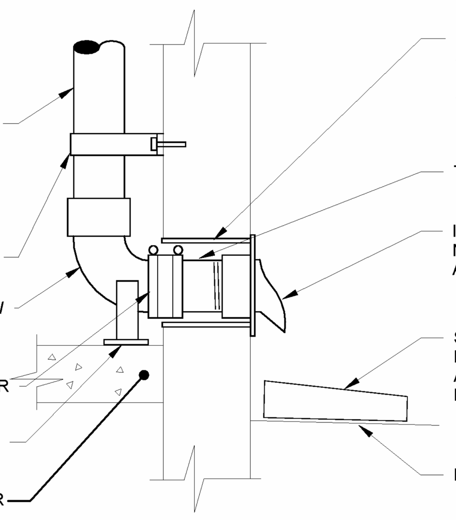

ARRANGEMENT SHOWN IS SCHEMATIC. ADJUST TO SUIT FIELD CONDITIONS. REFER TO SPECIFICATIONS FOR DOWNSPOUT NOZZLE, AND TYPE OF PIPE, FITTINGS, AND CONNECTORS.

v1.00

(3) DOWNSPOUT NOZZLE
NTS

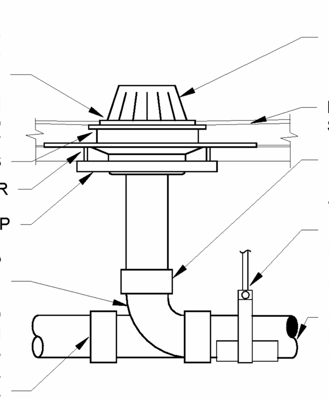

UNDERDECK CLAMP AND SUMP RECEIVER ARE NOT REQUIRED WHEN ROOF DRAIN BODY IS CAST INTO CONCRETE ROOF. INSTALL PER MANUFACTURER'S RECOMMENDATIONS. INSULATE ROOF DRAIN SUMP AND PIPE PER SPECIFICATIONS. LOCATE DRAINS WHERE SHOWN ON ARCHITECTURAL PLANS. VERIFY WITH STRUCTURAL PLANS FOR ROOF LOW POINTS. COORDINATE WITH STRUCTURAL DRAWINGS REGARDING PROVISION FOR SUPPLEMENTARY STEEL FRAMING AROUND ROOF OPENING. COORDINATE ROOF DRAIN INSTALLATION WITH ARCHITECTURAL DETAILS AND ROOFING INSTALLATION. SET OVERFLOW DRAIN WEIR ELEVATION 2" ABOVE PRIMARY ROOF DRAIN WEIR ELEVATION.

v1.00

(2) ROOF DRAIN INSTALLATION
NTS

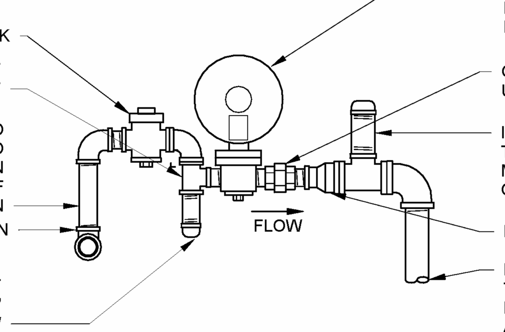

REFER TO PLANS FOR PIPE SIZE(S). ARRANGEMENT SHOWN IS SCHEMATIC. ADJUST TO SUIT FIELD CONDITIONS. PROVIDE CONNECTIONS SHOWN IN EQUIPMENT MANUFACTURER'S INSTALLATION INSTRUCTIONS. VERIFY CONNECTION LOCATIONS BEFORE INSTALL PIPE RUNS. REFER TO SPECIFICATIONS FOR PIPE AND FITTING MATERIALS AND INSTALLATION. PROVIDE GAS COCK, UNION AND DIRT LEG SAME SIZE AS BRANCH PIPE.

v1.00

(1) GAS PRESSURE REGULATOR
NTS

HENDERSON ENGINEERS
8345 LENEXA DRIVE, SUITE 300
LENEXA, KS 66214
TEL 913.742.5000 FAX 913.742.5001
WWW.HENDERSONENGINEERS.COM
2250004109
IL. CORPORATE NO: 184-002965
EXPIRES 4/30/2025

EXPIRES ON: 11/30/2025

LICENSED PROFESSIONAL ENGINEER
SCOTT A. WALTER
062.075705
OF ILLINOIS

03/01/2024

HMN architects
7400 W. 110th Street, Suite 200
Overland Park, Kansas 66210
913.451.9075 phone
913.451.9080 fax
hmnarchitects.com

KLINGNER & ASSOCIATES, P.C.
Engineers • Architects • Surveyors
604 LIBERTY ST, SUITE. 125
PELLA, IA 50219
515.612.7402
www.klingner.com

Henderson Engineers
8345 Lenexa Dr., Ste 300
Lenexa, KS 66214 913.742.5000
Chastain & Associates LLC
330 N. Central Ave.
Paris, IL 61944 217.465.5306

BID & PERMIT

EDGAR COUNTY PUBLIC SAFETY CENTER

EDGAR COUNTY, ILLINOIS
12636 950TH ROAD
PARIS, ILLINOIS 61944

21003.003

BID & PERMIT

Architect's Name
License #: XXXXX
Date: 03/01/2024

Issue	Date

Drawn by: Author

Copyright © 2024 by HMN Architects, Inc.

PLUMBING DETAILS

P401

SCOTT A. WALTER

PLUMBING FIXTURE SCHEDULE

PLUMBING PLAN MARK	DESCRIPTION
AAV1	AIR ADMITTANCE VALVE; STUDOR "MINI-VENT" # 20301, MEETING ASSE 1051 TYPE "A", POLYSTYRENE PROTECTIVE COVER, ABS VALVE WITH ELASTROMERIC MEMBRANE AND PVC CONNECTOR, 2" INLET, AND ATMOSPHERIC PORT.
AD1	AREA DRAIN: JAY R. SMITH # 2120L (-M), CAST IRON BODY, HEAVY-DUTY, 8" DIAMETER, DUCTILE IRON GRATE, SEEPAGE PAN, AND MEMBRANE FLASHING CLAMP. USE PUSH-ON JOINT OR CAULK OUTLET OF SIZE AS SHOWN ON PLANS.
AP1	ACCESS PANEL: JAY R. SMITH # 4762 - 12" x 12" - CL, TYPE 304 STAINLESS STEEL PANEL AND FRAME WITH CONCEALED HINGE, KEY OPERATED CYLINDER LOCK. PROVIDE WITH NAILER SLOTS FOR INSTALLATION IN STUD WALLS AND ANCHOR STRAPS FOR INSTALLATION IN MASONRY CONSTRUCTION.
CDB1	CONDENSATE DRAIN BOX: SIOUX CHIEF "OXBOX" MODEL # 696-3 OUTLET BOX, MODEL #696-CF SECONDARY DRAINAGE FUNNEL AND #696-SC SOLID COVER PLATE.
CU1	SECURITY WATER CLOSET / LAVATORY COMBINATION: ACORN 1418-ULF-CT-2-BP-04-M-09-MA-2-FBVO-FVBO-PH-LWE-PT-C01-FT-PC-SW 18" WIDE X 12" DEEP LAVATORY BOWL WITH RIGHT OR LEFT ANGLED 1.28 GALLON PER FLUSH WATER CLOSET BOWL, FLOOR MOUNTED, BACK OUTLET TYPE OF 14 GAUGE 304 STAINLESS STEEL WELDED CONSTRUCTION, # 4 FINISH, WITH PENAL BUBBLER WITH 0.5 GPM FLOW CONTROL, "AIR-TROL" HOT AND COLD AIR ACTIVATED CONTROL VALVES WITH PUSH BUTTONS CONFIGURED TO FEED TWO LAVATORIES FED WITH FDA POLYETHYLENE TUBING AS INDICATED ON THE DRAWINGS, TOILET PAPER HOLDER, 1-1/2" REMOVABLE P-TRAP WITH THROUGH WALL EXTENSION, CLEANOUT TEE WITH 3" PLAIN WASTE INLET, 4" NO-HUB OUTLET WITH CLEANOUT PIN (EXTEND PIN TO 2" ABOVE FLOW LINE), PUNCHED OPENING FOR FLUSH VALVE BY OTHERS AND ANTI FLOOD CONTROL DEVICE WITH MANUAL RESET. INSTALL WITH WALL SLEEVE, 8"LONG FLUSH VALVE THROUGH WALL CONNECTION KIT. TRIM: SLOAN "REGAL" # 9603-1.28-MBFW HYDRAULICALLY ACTUATED FLUSH VALVE WITH SWEAT ADAPTER KIT, WHEEL HANDLE STOP VALVE AND REAR ACCESS METAL BUTTON FIXTURE WALL ACTUATOR. INSTALL, WHERE INDICATED ON THE DRAWINGS SUPPORTING TWO FIXTURES, WITH A HUBLESS 4"SANITARY CROSS.
CU2	SECURITY WATER CLOSET / LAVATORY COMBINATION: ACORN 1418-ULF-AL OR AR-2-BP-04-M-09-MA-2-FVBO-PH-LWE-PT-C01-FT-PC-SW 18" WIDE X 12" DEEP LAVATORY BOWL WITH RIGHT OR LEFT ANGLED 1.28 GALLON PER FLUSH WATER CLOSET BOWL, FLOOR MOUNTED, BACK OUTLET TYPE OF 14 GAUGE 304 STAINLESS STEEL WELDED CONSTRUCTION, # 4 FINISH, WITH PENAL BUBBLER WITH 0.5 GPM FLOW CONTROL, "AIR-TROL" HOT AND COLD AIR ACTIVATED CONTROL VALVES WITH PUSH BUTTONS CONFIGURED TO FEED TWO LAVATORIES FED WITH FDA POLYETHYLENE TUBING AS INDICATED ON THE DRAWINGS, TOILET PAPER HOLDER, 1-1/2" REMOVABLE P-TRAP WITH THROUGH WALL EXTENSION, CLEANOUT TEE WITH 3" PLAIN WASTE INLET, 4" NO-HUB OUTLET WITH CLEANOUT PIN (EXTEND PIN TO 2" ABOVE FLOW LINE), PUNCHED OPENING FOR FLUSH VALVE BY OTHERS AND ANTI FLOOD CONTROL DEVICE WITH MANUAL RESET. INSTALL WITH WALL SLEEVE, 8"LONG FLUSH VALVE THROUGH WALL CONNECTION KIT. TRIM: SLOAN "REGAL" # 9603-1.28-MBFW HYDRAULICALLY ACTUATED FLUSH VALVE WITH SWEAT ADAPTER KIT, WHEEL HANDLE STOP VALVE AND REAR ACCESS METAL BUTTON FIXTURE WALL ACTUATOR. INSTALL, WHERE INDICATED ON THE DRAWINGS SUPPORTING TWO FIXTURES, WITH A JOSAM # 15984 NO-HUB VERTICAL 90 DEGREE PRISON FITTING WITH 2" THREADED AUXILIARY INLET, 2" COMMON NO-HUB VENT AND ANCHOR FEET SECURELY BOLTED TO THE FLOOR.
CU3	ADA SECURITY WATER CLOSET / LAVATORY COMBINATION: ACORN 1449-LO OR RO-2-DMB-BP-04-M-09-MA-2-FBVO-PH-LWE-PT-C01-FT-PC-SW 18" WIDE X 12" DEEP LAVATORY BOWL WITH RIGHT OR LEFT ANGLED 1.28 GALLON PER FLUSH WATER CLOSET BOWL, FLOOR MOUNTED, BACK OUTLET TYPE OF 14 GAUGE 304 STAINLESS STEEL WELDED CONSTRUCTION, # 4 FINISH, WITH PENAL BUBBLER WITH 0.5 GPM FLOW CONTROL, "AIR-TROL" HOT AND COLD AIR ACTIVATED CONTROL VALVES WITH PUSH BUTTONS CONFIGURED TO FEED TWO LAVATORIES FED WITH FDA POLYETHYLENE TUBING AS INDICATED ON THE DRAWINGS, TOILET PAPER HOLDER, 1-1/2" REMOVABLE P-TRAP WITH THROUGH WALL EXTENSION, CLEANOUT TEE WITH 3" PLAIN WASTE INLET, 4" NO-HUB OUTLET WITH CLEANOUT PIN (EXTEND PIN TO 2" ABOVE FLOW LINE), PUNCHED OPENING FOR FLUSH VALVE BY OTHERS AND ANTI FLOOD CONTROL DEVICE WITH MANUAL RESET. INSTALL WITH WALL SLEEVE, 8"LONG FLUSH VALVE THROUGH WALL CONNECTION KIT. TRIM: SLOAN "SLOAN" # 9603-1.28-MBFW HYDRAULICALLY ACTUATED FLUSH VALVE WITH SWEAT ADAPTER KIT, WHEEL HANDLE STOP VALVE AND REAR ACCESS METAL BUTTON FIXTURE WALL ACTUATOR. INSTALL, WHERE INDICATED ON THE DRAWINGS SUPPORTING TWO FIXTURES, WITH A HUBLESS 4"SANITARY CROSS.
DCV1	DOUBLE CHECK VALVE BACKFLOW PREVENTER: WATTS # LF007QT-S, MEETING ASSE 1015, LEAD FREE CAST BRONZE BODY, SCREW DRIVER SLOTTED TEST COCKS, QUARTER TURN BALL VALVES, AND STRAINER.
DSB1	DOWNSPOUT BOOT: JAY R. SMITH # 1787-24, 24" LONG CAST IRON BODY WITH CAST IRON SECURING STRAPS, 4" ROUND INLET, 2" CLEANOUT PLUG, AND 4" DIAMETER OUTLET.
DSN	DOWNSPOUT NOZZLE: JAY R. SMITH # 1770T, CAST BRONZE BODY AND FLANGE. PROVIDE OUTLET SIZE AS SHOWN ON PLANS.
ECO1	EXTERIOR CLEANOUT: JAY R. SMITH # 4261L SERIES DUCO CAST IRON DOUBLE FLANGED HOUSING WITH HEAVY DUTY SECURED SCORIATED CAST IRON COVER WITH LIFTING DEVICE AND CLEANOUT BODY WITH ABS PLASTIC PLUG WITH GASKET SEAL AND PUSH-ON JOINT. REFER TO SPECIFICATIONS FOR INSTALLATION.
ECO2	EXTERIOR CLEANOUT (2-WAY): JAY R. SMITH # 4261L SERIES DUCO CAST IRON DOUBLE FLANGED HOUSING WITH HEAVY DUTY SECURED SCORIATED CAST IRON COVER WITH LIFTING DEVICE AND CLEANOUT BODY WITH ABS PLASTIC PLUG WITH GASKET SEAL AND PUSH-ON JOINT. REFER TO SPECIFICATIONS FOR INSTALLATION.
EWC	ELECTRIC WATER COOLER (ADA ACCESSIBLE): ELKAY # EZSTL8C WALL-MOUNTED, LEAD FREE, BARRIER FREE, DUAL-LEVEL, FRONT AND SIDE PUSH ACTUATOR BARS, STAINLESS STEEL BOWL, FLEXIBLE POLYESTER ELASTOMER SAFETY BUBBLER AND GALVANIZED STEEL FRONT AND SIDES, CHILLER WITH 8.0 GALLONS PER HOUR CAPACITY, 50° F DRINKING WATER AT 80° F INLET TEMPERATURES 90° F ROOM TEMPERATURE. TRIM: McGUIRE # LF2165CC LEAD FREE BRASS COMPRESSION ANGLE STOP VALVE WITH RISER AND ESCUTCHEON, McGUIRE # B8912CF 1-1/2" 17 GAUGE CAST CHROME PLATED BRASS ADJUSTABLE P-TRAP AND WASTE ARM WITH CLEANOUT PLUG AND ESCUTCHEON, AND SUITABLE CARRIER WITH STANCHIONS TO FLOOR. ELECTRICAL REQUIREMENTS: 120-VOLT, 4 FULL LOAD AMPS.
FC1	FLEXIBLE CONNECTOR: UNITED FLEXIBLE #AFBX1, 3" X 12" LONG CORRUGATED 316L STAINLESS STEEL BELLOWS AND 304 STAINLESS STEEL SINGLE BRAID WITH CLASS 150 STAINLESS STEEL WELDED PLATE FLANGE ON EACH PIPE WITH A MAXIMUM OPERATING PRESSURE OF 290 PSI.
FCO	FLOOR CLEANOUT: JAY R. SMITH, CAST IRON BODY, FLASHING FLANGE WITH CLAMPING COLLAR, ABS PLUG, AND ADJUSTABLE, ROUND, SECURED, NICKEL BRONZE, TOP. # 4031L (-F-C), SCORIATED TOP FOR EXPOSED, FLUSH WITH FINISHED FLOOR, APPLICATION(S), # 4031L (-F-C-Y), STAINLESS STEEL MARKER FOR INSTALLATION IN CARPETED FLOOR AREA(S), # 4151 (-F-C), 1/8" RECESS FOR INSTALLATION IN TILED FLOOR AREA(S), # 4191 (-F-C), 1/2" RECESS FOR INSTALLATION IN TERRAZZO AND SIMILAR POURED FLOOR AREA(S). REFER TO SPECIFICATIONS FOR INSTALLATION.
FCOH	FLOOR CLEANOUT: HEAVY DUTY: JAY R. SMITH #4111L CAST IRON BODY, FLASHING FLANGE WITH CLAMPING COLLAR, ABS PLUG, AND ADJUSTABLE, ROUND, SECURED, HEAVY DUTY SCORIATED NICKEL BRONZE TOP. REFER TO SPECIFICATIONS FOR INSTALLATION.
FCV1	FLOW CONTROL VALVE: FLOWDESIGN # ICSS "AUTOFLOW", SERIES 300 STAINLESS UNION BODY WITH NICKEL PLATED UNION NUT, STAINLESS STEEL PRESSURE COMPENSATING CARTRIDGE, MEETING NSF 61 ANNEX G, NAMEPLATE AND 1/2" VALVE BODY SIZE UNLESS SHOWN OTHERWISE ON PLANS. PROVIDE 0.5 GPM FLOW RATE CARTRIDGE UNLESS SHOWN OTHERWISE ON PLANS.
FD1	FLOOR DRAIN: JAY R .SMITH # 2005L(A)-U-NB, CAST IRON BODY AND CLAMPING COLLAR, ADJUSTABLE 6" ROUND NICKEL BRONZE STRAINER AND VANDAL PROOF SCREWS. USE PUSH-ON JOINT OF OUTLET SIZE AS SHOWN ON PLANS. TRAP SEAL: PROVIDE TRAP SEAL PER SPECIFICATIONS FOR ACTUAL FLOOR DRAIN MODEL AND SIZE.
FD2	FLOOR DRAIN: ZURN FD2250 SHOWER DRAIN, PVC BODY, CLAMP COLLAR WITH ADJUSTABLE PVC HEAD AND STAINLESS STEEL STRAINER USE PUSH-ON JOINT OF OUTLET SIZE AS SHOWN ON PLANS.
FD3	FLOOR DRAIN: WILLOUGHBY # LRFD SERIES, CAST IRON BODY AND CLAMPING COLLAR, NIKALOY ADJUSTABLE HOUSING, 6" ROUND STAINLAEE STEEL LIGATURE-RESISTANT STRAINER AND VANDAL PROOF PIN TORX SCREWS. USE PUSH-ON JOINT OF OUTLET SIZE AS SHOWN ON PLANS WITH DEEP SEAL TRAP.

PLUMBING FIXTURE SCHEDULE

PLUMBING PLAN MARK	DESCRIPTION
FFD	FLSUHING FLOOR DRAIN: WILLOUGHBY #FD-1400-WF-EFVP-WMSII 14" DIAMTER, 14 GAUGE, 304 STAINLESS STEEL FLOOR DRAIN WITH INTEGRAL P-TRAP WITH 3" NO-HUB CONNECTION, 1-1/2"COLD WATER FLSUH CNOOECTION, 7 GAUGE STAINLESS STEEL FLUSH GRATE WITH 1/2" WIDE ELONGATED HOLES. TRIM: ELECTONICALLY ACTUATED FLUSH VALVE WITH SWEAT ADAPTER KIT, WHEEL HANDLE STOP VALVE, SOLENOID VALVE ACTUATOR AND PIEZO ELECTRIC PUSHBUTTON ASSEMBLY WITH REMOTE FRONT ACCES JUNTION BOX. INSTALL WHERE INDICATED ON THE DRAWINGS. PROVIDE 1-1/2' TYPE "K" FLUSH TUBE FROM FLUSH VAVLE OUTLET TO DRAIN FLUSH CONNECTION.. PROVIDE TYPE "K" COPPER TUBING FROM FLUSH VALVE TO FLOOR DRAIN AS INDICATED ON DETAIL. PROVIDE 1/2"CONDIUT PER ELECTRICAL SPECIFICATIONS FROM JUNCTION BOX TO ABOVE CEILING AND INTO TOILET CHASE AND LAND CABLE AT "CVC2" ELECTRONIC CONTROLLER.
FS1	FLOOR SINK: JAY R. SMITH # 3111L (-12), 6" DEEP CAST IRON BODY WITH ACID RESISTING ENAMELED INTERIOR, ANCHOR FLANGE WITH SEEPAGE HOLES, CLAMP COLLAR, ALUMINUM SEDIMENT BUCKET, AND 12" SQUARE NICKEL BRONZE RIM AND HALF GRATE. USE PUSH-ON JOINT OF OUTLET SIZE AS SHOWN ON PLANS.
FS2	FLOOR SINK: JAY R. SMITH # 3131L (-12), 10" DEEP CAST IRON BODY WITH ACID RESISTING ENAMELED INTERIOR, ANCHOR FLANGE WITH SEEPAGE HOLES, CLAMP COLLAR, WHITE ABS SEDIMENT BUCKET, AND 12" SQUARE NICKEL BRONZE RIM AND HALF GRATE. USE PUSH-ON JOINT OF OUTLET SIZE AS SHOWN ON PLANS.
GI	GREASE INTERCEPTOR: GREENTURTLE PROCEPTOR GMC 1000, FIBERGLASS REINFORCED PLASTICS BODY, SINGLE BAFFLE DESIGN, 1000 GALLON CAPACITY AND RATED FOR 577 GALLONS OF GREASE STORED, WITH (1) 24" GASKETED, AASHTO H-20 LOAD RATED COVER WITH EXTENSIONS. TRAPPED INLET AND OUTLET AND (2) 3" VENT CONNECTIONS. EXTEND CLEANOUTS TO GRADE. UNIT SHALL INCLUDE 30 YEAR WARRANTY AGAINST LEAKS AND STRUCTURAL FAILURE.
HD1	HUB DRAIN FLOOR SINK: JAY R. SMITH # 3811T (-DBS), 7" DEEP x 6" DIAMETER CAST IRON BODY WITH ACID RESISTING ENAMELED INTERIOR AND EXTERIOR FUNNEL WITH 2" CAST IRON SCREWED OUTLET, SCREWED x HUBLESS ADAPTER, HUBLESS CAST IRON P-TRAP AND ALUMINUM DOME BOTTOM STRAINER.
IMB	FIRE RATED ICE MAKER BOX: GUY GRAY MODEL # FRMIB12ABDS, ASTM E814 LISTED, WHITE POWDER COAT ON COLD ROLLED STEEL BOX WITH TWO INTUMESCENT PADS ATTACHED, BOTTOM INLET WATER SUPPLY WITH 1/2" x 1/4" LEAD FREE COMPRESSION ANGLE STOP VALVE. TRIM: LOOP 4 FEET OF 1/4" TYPE "K" SOFT COPPER TUBING.
IMB1	ICE MAKER BOX: GUY GRAY MODEL # BIM875, 20 GAUGE GALVANIZED STEEL BOX, 18 GAUGE STEEL FACEPLATE, BOTTOM INLET WATER SUPPLY WITH 1/2" x 1/4" COMPRESSION ANGLE STOP VALVE. TRIM: LOOP 4 FEET OF 1/4" TYPE "K" SOFT COPPER TUBING.
JS1	JANITOR'S SINK: STERN-WILLIAMS # MTB-2424, 24" x 24" x 10" HIGH TERRAZZO BASIN WITH INTEGRAL STAINLESS STEEL DRAIN BODY. FAUCET: CHICAGO FAUCET # 897-CP FAUCET WITH WALL BRACE, INTEGRAL VACUUM BREAKER, PAIL HOOK, AND 3/4" MALE HOSE THREADED OUTLET. SECURE FAUCET IN WALL WITH BACKBOARD. TRIM: # BP TYPE 304, 20 GAUGE, STAINLESS STEEL WALL SURROUNDS, # T-35 THREE FOOT LONG REINFORCED HOSE WITH 3/4" CHROME COUPLING AND WALL HOOK, # V-70 EXTRUDED VINYL BUMPER GUARD, AND # T-40 24" STAINLESS STEEL MOP HANGER.
JS2	JANITOR'S SINK: STERN-WILLIAMS # SB-500, 36" x 36" x 12" HIGH TERRAZZO BASIN WIT ONE PIECE STAINLESS STEEL CAP AND INTEGRAL STAINLESS STEEL DRAIN BODY. FAUCET: CHICAGO FAUCET # 897-CP FAUCET WITH WALL BRACE, INTEGRAL VACUUM BREAKER, PAIL HOOK, AND 3/4" MALE HOSE THREADED OUTLET. SECURE FAUCET IN WALL WITH BACKBOARD. TRIM: # BP TYPE 304, 20 GAUGE, STAINLESS STEEL WALL SURROUNDS, # T-35 THREE FOOT LONG REINFORCED HOSE WITH 3/4" CHROME COUPLING AND WALL HOOK, AND # T-40 24" STAINLESS STEEL MOP HANGER.
LV1	WALL-MOUNTED LAVATORY (ADA ACCESSIBLE): AMERICAN STANDARD # 0355.012 "LUCERNE" 20-1/2" X 18-1/4" RECTANGULAR WALL MOUNTED WHITE VITREOUS CHINA FIXTURE WITH FAUCET LEDGE AND FRONT OVERFLOW. FAUCET: CHICAGO FAUCET # 802-VE2805ABXKCP 4" CENTERSET, VANDAL RESISTANT, LEAD FREE FAUCET WITH # 390 LEVER HANDLES, CERAMIC QUARTER TURN CARTRIDGES AND # E2805 0.5 GPM AERATOR. TRIM: McGUIRE # 155A GRID DRAIN WITH TAILPIECE, McGUIRE # LF2165CCLK LEAD FREE BRASS LOOSE KEY COMPRESSION ANGLE STOP VALVES WITH RISERS AND ESCUTCHEONS, McGUIRE # B8872CF 1-1/4" 17 GAUGE CAST CHROME PLATED BRASS ADJUSTABLE P-TRAP AND WASTE ARM WITH CLEANOUT PLUG AND ESCUTCHEON, CONCEALED ARM CARRIER WITH STANCHIONS TO FLOOR, AND PLUMBEREX "PRO-EXTREME" # X-4333 INSULATION KIT FOR WATER AND WASTE PIPES. THERMOSTATIC MIXING VALVE: POWERS # LFe480, SOLID LEAD FREE BRASS BODY, THERMOSTATIC WAX ELEMENT, CORROSION RESISTANT INTERNAL PARTS, AND INTEGRAL CHECKS, ASSE 1070 COMPLIANT, CAPABLE OF 2.2 GPM WITH A 20 PSI DIFFERENTIAL AND A MINIMUM FLOW RATE OF 0.5 GPM. SET TEMPERATURE TO 110F FOR DUEL TEMPERATURE LAVATORIES AND HAND SINKS. MOUNT BELOW THE PLUMBING FIXTURE WHERE INDICATED ON PLAN(S).
MBV	MOTORIZED BALL VALVE: LINE SIZED APOLLO # 82LF-200, THREE PIECE LEAD-FREE BODY, SWEAR ENDS, FULL PORT BRASS BALL WITH APPOLLO MOTORIZED ACTUATOR # AE20010-7, PERMANENTLY LUBRICATED GEAR TRAIN AND BEARINGS, 2 SPDT SWITCHES, NEMA 4 ENCLOSURE, POSITION TRANSMITTER AND # 78153201 STAINLESS STELL MOUNTING KIT. ELECTRICAL REQUIREMENTS: 120 VOLT SINGLE PHASE POWER SUPPLY, 1 FLA.
NW1	NON-FREEZE WALL HYDRANT: PRIER PRODUCTS # C-634NBX1, SATIN NICKEL PLATED BRASS 1" MALE INLET BY 3/4" FEMALE INLET, 3/4" THREADED HOSE CONNECTION, LOOSE KEY HANDLE, HYDRANT LENGTH AS REQUIRED FOR INSTALLED WALL THICKNESS, ADJUSTABLE WALL CLAMP, BRASS BOX WITH SATIN NICKEL PLATED FINISH AND INTEGRAL ASSE 1052 DOUBLE CHECK VACUUM BREAKER.
ORD1	OVERFLOW ROOF DRAIN: JAY R. SMITH # 1330Y (-C-R-CID-WD-02), 8-1/2" DIAMETER CAST IRON BODY, FLASHING CLAMP, GRAVEL STOP, UNDERDECK CLAMP, SUMP RECEIVER, HUBLESS OUTLET, AND CAST IRON DOME BOLTED OR LOCKED DOWN AND 2" HIGH WATER DAM. PROVIDE OUTLET SIZE AS SHOWN ON PLANS.
PWF	PRISON WASTE FITTING: CHARLOTTE PIPE AND FOUNDRY, # NH 502, 4 WITH TAP, CAST IRON MEETING STANDARDS CISPI 301, ASTM A888 AND BEARING CISPI AND ASTM TRADEMARKS, 4" NO-HUB PRISON FITTING WITH 2" TOP VENT, INTERIOR BAFFLE TO PREVENT PASSAGE OF CONTRABAND BETWEEN CELLS AND TAPPING BOSS FOR CLEANOUT ACCESS.
RD1	ROOF DRAIN: JAY R. SMITH # 1330Y (-C-R-CID), 8-1/2" DIAMETER CAST IRON BODY, FLASHING CLAMP, GRAVEL STOP, UNDERDECK CLAMP, SUMP RECEIVER, HUBLESS OUTLET, AND CAST IRON DOME BOLTED OR LOCKED DOWN. PROVIDE OUTLET SIZE AS SHOWN ON PLANS.
RH	ROOF NON-FREEZE POST HYDRANT: MAPA PRODUCTS # MPH-24FP FREEZE PROOF POST HYDRANT MEETING ASSE #1057 WITH BLACK POWDER COATED CAST ALUMINUM WEATHER-GUARD DOME HANDLE, STAINLESS STEEL SHROUD WITH WELDED STAINLESS STEEL FLANGE, UNDER DECK CLAMP, BRONZE GLOBE ANGLE VALVE, 3/4" HOSE CONNECTION, QUICK DISCONNECT WITH BUILT-IN VACUUM BREAKER, STAINLESS STEEL RESERVOIR.
RPZ1	REDUCED PRESSURE ZONE BACKFLOW PREVENTER: WATTS # LF009QT-S, MEETING ASSE 1013, LEAD FREE CAST BRONZE BODY, QUARTER TURN TEST COCKS, QUARTER TURN BALL VALVES, BRONZE STRAINER, AND # 909AG AIR GAP FITTING.
SG	SEWAGE GRINDER: JWC ENVIRONMENTAL MODEL 10002 "MUFFIN MONSTER", GRINDER SUITABLE FOR 80 GPM, GRINDERSTACK WITH ALLOY STEEL CUTTERS, GREEN EPOXY COATED DUCTILE IRON END HOUSING AND HIGH FLOW SIDE RAILS, 304 STAINLESS STEEL GUIDE RAILS AND LIFT BAIL. CONTROLLER: JWC ENVIRONMENTAL #PC2200 STANDARD MOTOR CONTROLLER IN NEMA 4X IN FIBERGLASS ENCLOSURE ACCEPTING 480V-3-60 INPUT POWER, INCLUDE IEC STARTER WITH OVER CURRENT PROTECTION, JAM SENSING CURRENT TRANSFORMER AND MICRO PLC. ELECTRICAL REQUIREMENTS: 480V-3-60, 2HP
SK1	SINK: ELKAY # LR-1517-2, 15" x 17-1/2" x 7-1/2" DEEP, SINGLE COMPARTMENT, SELF-RIMMING, 18 GAUGE TYPE 302 STAINLESS STEEL, FIXTURE WITH FAUCET LEDGE. SET IN BED OF PUTTY. FAUCET: CHICAGO FAUCET # 895-207589AB 4" CENTERSET LEAD FREE FAUCET WITH VANDAL RESISTANT # 369 LEVER HANDLES, GN1A GOOSENECK SPOUT, # E36VP 1.5 GPM VANDAL RESISTANT, LAMINAR FLOW AERATOR, QUARTER TURN CERAMIC CARTRIDGES TRIM: McGUIRE # LF2165CC LEAD FREE BRASS WHEEL HANDLE ANGLE STOP VALVES WITH RISERS AND ESCUTCHEONS, McGUIRE # 151M CUP STRAINER WITH 1-1/2" 17 GAUGE TAILPIECE, McGUIRE # B8912CF 1-1/2" 17 GAUGE CAST CHROME PLATED BRASS ADJUSTABLE P-TRAP WITH BRASS CLEANOUT AND ESCUTCHEON.

PLUMBING FIXTURE SCHEDULE

PLUMBING PLAN MARK	DESCRIPTION
SK2	SINK (ADA ACCESSIBLE): ELKAY # LRAD-3319-55-3, 33" x 19-1/2" x 5-1/2" DEEP, DOUBLE COMPARTMENT, SELF-RIMMING, 18 GAUGE TYPE 302 STAINLESS STEEL, FIXTURE WITH FAUCET LEDGE. SET IN BED OF PUTTY. FAUCET: CHICAGO FAUCET # 201-214914AB 8" SPREAD LEAD FREE FAUCET WITH VANDAL RESISTANT # 317 WRISTBLADE HANDLES, L9 SWING SPOUT, # E36VP 1.5 GPM VANDAL RESISTANT, LAMINAR FLOW AERATOR, QUARTER TURN CERAMIC CARTRIDGES. TRIM: McGUIRE # LF2165CC LEAD FREE BRASS WHEEL HANDLE ANGLE STOP VALVES WITH RISERS AND ESCUTCHEONS, (2) McGUIRE # 151M CUP STRAINERS WITH 1-1/2" 17 GAUGE TAILPIECE, McGUIRE # 111C16G17 1-1/2" 17 GAUGE CONTINUOUS WASTE, McGUIRE # B8912CF 1-1/2" 17 GAUGE CAST CHROME PLATED BRASS ADJUSTABLE P-TRAP WITH BRASS CLEANOUT AND ESCUTCHEON, AND PLUMBEREX # EO3061 KITCHEN END OUTLET AND P-TRAP INSULATION KIT AND # X-4112 VALVE AND SUPPLY COVERS.
SK3	SINK (ADA ACCESSIBLE): ELKAY # LRAD-1517-2, 15" x 17-1/2" x 5-1/2" DEEP, SINGLE COMPARTMENT, SELF-RIMMING, 18 GAUGE TYPE 302 STAINLESS STEEL, FIXTURE WITH FAUCET LEDGE. SET IN BED OF PUTTY. FAUCET: CHICAGO FAUCET # 895-201199AB 4" CENTERSET LEAD FREE FAUCET WITH VANDAL RESISTANT # 317 WRISTBLADE HANDLES, GN1A GOOSENECK SPOUT, # E36VP 1.5 GPM VANDAL RESISTANT, LAMINAR FLOW AERATOR, QUARTER TURN CERAMIC CARTRIDGES TRIM: McGUIRE # LF2165CC LEAD FREE BRASS WHEEL HANDLE ANGLE STOP VALVES WITH RISERS AND ESCUTCHEONS, McGUIRE # 151M CUP STRAINER WITH 1-1/2" 17 GAUGE TAILPIECE, McGUIRE # B8912CF 1-1/2" 17 GAUGE CAST CHROME PLATED BRASS ADJUSTABLE P-TRAP WITH BRASS CLEANOUT AND ESCUTCHEON, PLUMBEREX "PRO-EXTREME" # X-4222 INSULATION KIT FOR WATER AND WASTE PIPES.
SOI	OIL INTERCEPTOR: GREENTURTLE PROCEPTOR OMC 1500, FIBERGLASS REINFORCED PLASTICS BODY, SINGLE BAFFLE DESIGN, 1500 GALLON CAPACITY AND RATED FOR 819 GALLONS OF GREASE STORED, WITH (1) 24" GASKETED, AASHTO H-20 LOAD RATED COVER WITH EXTENSIONS. TRAPPED INLET AND OUTLET AND (2) 3" VENT CONNECTIONS. EXTEND CLEANOUTS TO GRADE. UNIT SHALL INCLUDE 30 YEAR WARRANTY AGAINST LEAKS AND STRUCTURAL FAILURE.
SV1	SHOWER VALVE (ADA ACCESSIBLE): SYMMONS # 9605-X-PLR, PISTON TYPE PRESSURE BALANCING MIXING VALVE WITH BRASS STEM, MEETING ASSE 1016P, SINGLE BLADE LEVER HANDLE, SET ADJUSTABLE LIMIT STOP SCREW TO 110F, INTEGRAL SERVICE STOPS, DIVERTER VALVE, [1.5 GPM][2.0 GPM] "CLEAR-FLO" SHOWER HEAD WITH ARM AND FLANGE, [1.5 GPM][2.0 GPM] WALL / HAND SHOWER WITH FLEXIBLE METAL HOSE, IN-LINE VACUUM BREAKER, WALL CONNECTION AND FLANGE, AND 30" SLIDE BAR.
SV2	SECURITY SHOWER VALVE: ACORN # 1741-03-M-PYY-RD, "PENAL-PAK", 14 GAUGE, TYPE 304 STAINLESS STEEL WALL SHOWER AND PANEL, STAINLESS STEEL OR CHROME-PLATED TRIM, PNUEMATICALLY AIR-CONTROLLED METERING VALVE CONFORMING TO NSF61, NON-HOLD OPEN TYPE PUSHBUTTON, 2.5 GPM VANDAL RESISTANT PENAL SHOWERHEAD WITH LOCKABLE UNIVERSAL BALL JOINT AND RECESSED SOAP DISH.
SV3	SECURITY SHOWER VALVE (ADA ACCESSIBLE): ACORN # 1741-04-PYY-PSO-RD, "PENAL-PAK", 14 GAUGE, TYPE 304 STAINLESS STEEL WALL SHOWER AND PANEL, FRONT ACCESS, STAINLESS STEEL OR CHROME-PLATED TRIM, PNUEMATICALLY AIR-CONTROLLED METERING VALVE CONFORMING TO NSF61, NON-HOLD OPEN TYPE PUSHBUTTON, 2.5 GPM VANDAL RESISTANT PENAL SHOWERHEAD WITH LOCKABLE UNIVERSAL BALL JOINT HANDHELD SHOWER WITH VACUUM BREAKER, QUICK DISCONNECT WITH POSITIVE SHUTOFF AND MOUNTING BRAKET AND RECESSED SOAP DISH.
TD1	TRENCH DRAIN: ZURN # Z-886-HD-E1-U4-GDE-USA, 6-3/4" WIDE HIGH DENSITY POLYETHYLENE STRUCTURAL COMPOSITE TRENCH DRAIN WITH GALVANIZED DUCTILE SLOTTED CLASS E GRATE, CUT IN 20" SECTIONS FOR REQUIRED LENGTH AS SHOWN ON FLOOR PLAN. PROVIDE WITH END CAPS AND 4" BOTTOM OUTLET. INSTALL PER MANUFACTURER'S RECOMMENDATIONS.
TMV1	THERMOSTATIC MIXING VALVE: POWERS # LFe480, SOLID LEAD FREE BRASS BODY, THERMOSTATIC WAX ELEMENT, CORROSION RESISTANT INTERNAL PARTS, AND INTEGRAL CHECKS, ASSE 1070 COMPLIANT, CAPABLE OF 2.2 GPM WITH A 20 PSI DIFFERENTIAL AND A MINIMUM FLOW RATE OF 0.5 GPM. SET TEMPERATURE TO 110F FOR DUEL TEMPERATURE LAVATORIES AND HAND SINKS, 100F FOR SINGLE TEMPERATURE LAVATORIES AND HAND SINKS AND 120F FOR SINKS. MOUNT BELOW THE PLUMBING FIXTURE WHERE INDICATED ON PLAN(S).
TMV2	THERMOSTATIC MIXING VALVE: POWERS # LFLM491-2, SOLID LEAD FREE BRASS BODY WITH 3/4" SWEAT CONNECTIONS, CORROSION RESISTANT INTERNAL PARTS, AND CHECK VALVES, ASSE 1017 COMPLIANT, CAPABLE OF 7.6 GPM WITH A 5 PSI DIFFERENTIAL AND A MINIMUM FLOW RATE OF 0.5 GPM. SET MAXIMUM TEMPERATURE TO 110F.
UR1	URINAL (ADA ACCESSIBLE): AMERICAN STANDARD # 6561.017 "TRIMBROOK" WHITE VITREOUS CHINA FIXTURE WITH FLUSHING RIM, 3/4" TOP SPUD, AND SIPHON FLUSH ACTION. VALVE: SLOAN "OPTIMA – SLOAN MODEL" # 186 ES-S TMO 1.0 GALLON PER FLUSH, EXPOSED, CHROME-PLATED, HARD WIRED, WALL MOUNTED SENSOR OPERATED, DIAPHRAGM TYPE, FLUSH VALVE LESS TRANSFORMER WITH CHLORAMINE RESISTANT DIAPHRAGM AND PROTECTED ORIFICE, MECHANICAL OVERRIDE BUTTON, ESCUTCHEON, INTEGRAL SCREWDRIVER STOP, VACUUM BREAKER, 3/4" FLUSH TUBE, AND SWEAT ADAPTER KIT. TRIM: SUITABLE CARRIER WITH STANCHIONS TO FLOOR.
WC1	FLOOR-MOUNTED WATER CLOSET: AMERICAN STANDARD # 2234.001 "MADERA" WHITE VITREOUS CHINA FIXTURE WITH ELONGATED UNIVERSAL BOWLAND DIRECT-FED SIPHON JET ACTION. VALVE- SLOAN "SLOAN" # 111-1.6 GALLON PER FLUSH EXPOSED CHROME-PLATED DIAPHRAGM TYPE FLUSH VALVE WITH CHLORAMINE RESISTANT DIAPHRAGM AND PROTECTED ORIFICE, OSCILLATING ADA COMPLIANT HANDLE, ESCUTCHEON, INTEGRAL SCREWDRIVER STOP WITH VANDAL RESISTANT CAP, VACUUM BREAKER, AND SWEAT ADAPTER KIT. TRIM- CHURCH # 9500SSCT WHITE OPEN-FRONT CONTOURED, SOLID PLASTIC, HEAVY DUTY, SEAT LESS COVER WITH SELF-SUSTAINING CHECK HINGES AND STAINLESS STEEL BOLTS.
WC2	FLOOR-MOUNTED WATER CLOSET (ADA ACCESSIBLE): AMERICAN STANDARD # 3043.001 "MADERA" WHITE VITREOUS CHINA FIXTURE WITH ELONGATED UNIVERSAL BOWL AND DIRECT-FED SIPHON JET ACTION. VALVE- SLOAN "SLOAN" # 111-1.6 GALLON PER FLUSH EXPOSED CHROME-PLATED DIAPHRAGM TYPE FLUSH VALVE WITH CHLORAMINE RESISTANT DIAPHRAGM AND PROTECTED ORIFICE, OSCILLATING ADA COMPLIANT HANDLE, ESCUTCHEON, INTEGRAL SCREWDRIVER STOP WITH VANDAL RESISTANT CAP, VACUUM BREAKER, AND SWEAT ADAPTER KIT. INSTALL FLUSH VALVE HANDLE ON THE WIDE SIDE OF THE STALL. TRIM- CHURCH # 9500SSCT WHITE OPEN-FRONT CONTOURED, SOLID PLASTIC, HEAVY DUTY, SEAT LESS COVER WITH SELF-SUSTAINING CHECK HINGES AND STAINLESS STEEL BOLTS.
WCO	WALL CLEANOUT: JAY R. SMITH # 4530S, CAST IRON CLEANOUT TEE, COUNTER SUNK PLUG, STAINLESS STEEL ROUND COVER AND SCREW, AND IRON PLUG WITH GASKET SEAL. REFER TO SPECIFICATIONS FOR INSTALLATION.
WF1	WATER FILTER: CUNO # CFS6112-S, 1 MICRON GRADED DENSITY CARBON FILTER, SCALE INHIBITOR, 3/8" CONNECTIONS, ONE QUICK CHANGE CARTRIDGE, AUTOMATIC SHUT-OFF VALVE, AND 1.5 GPM MAXIMUM FLOW RATE.
WHA	WATER HAMMER ARRESTER: PRECISION PLUMBING PRODUCTS, HARD DRAWN COPPER BODY WITH WROUGHT COPPER FITTINGS, PISTON TYPE WITH LUBRICATED EPDM "O" RING SEALS, MEETING ASSE 1010 OR PDI WH-201. PROVIDE PDI SIZES "A" THROUGH "F" AS SHOWN ON PLANS. PROVIDE SIZE "A" UNLESS SHOWN OTHERWISE ON THE PLANS.

HENDERSON ENGINEERS
8345 LENEXA DRIVE, SUITE 300
LENEXA, KS 66214
TEL 913.742.5000 FAX 913.742.5001
WWW.HENDERSONENGINEERS.COM
2250004109
IL. CORPORATE NO: 184-002965
EXPIRES 4/30/2025

EXPIRES ON: 11/30/2025
LICENSED PROFESSIONAL ENGINEER
SCOTT A. WALTER
062.075705
OF ILLINOIS
03/01/2024

HMN architects
7400 W. 110th Street, Suite 200
Overland Park, Kansas 66210
913.451.9075 phone
913.451.9080 fax
hmnarchitects.com

KLINGNER & ASSOCIATES, P.C.
Engineers • Architects • Surveyors
604 LIBERTY ST, SUITE. 125
PELLA, IA 50219
515.612.7402
www.klingner.com

Henderson Engineers
8345 Lenexa Dr., Ste 300
Lenexa, KS 66214 913.742.5000
Chastain & Associates LLC
330 N. Central Ave.
Paris, IL 61944 217.465.5306

BID & PERMIT

EDGAR COUNTY PUBLIC SAFETY CENTER
EDGAR COUNTY, ILLINOIS
12636 950TH ROAD
PARIS, ILLINOIS 61944

21003.003

BID & PERMIT

Architect's Name
License #: XXXXX
Date: 03/01/2024

△	Issue	Date

Drawn by: Author
Copyright © 2024 by HMN Architects, Inc.

PLUMBING SCHEDULES

P500

SCOTT A. WALTER

DOMESTIC BOOSTER PUMP SCHEDULE

MARK	SERVICE	MANUFACTURER / MODEL #	TYPE NOTE A	DISCHARGE HEADER PRESSURE (PSI)	SUCTION HEADER PRESSURE (PSI)	NUMBER OF PUMPS	SYSTEM FLOW RATE (GPM)	INDIVIDUAL PUMP CAPACITY	SUCTION HEADER SIZE (IN.)	DISCHARGE HEADER SIZE (IN.)	ELECTRICAL DATA (NOTE B) VOLTS	PHASE	HP	ACCUMULATOR TANK SIZE (GAL.)	WEIGHT (LBS)	NOTES
BP	DOMESTIC BOOSTER	GRUNDFOS CRE 10-4	T	53	14	3	146	35%	3	3	480	3	3	40		C, D, E

NOTES:

A. BOOSTER PUMP CONFIGURATION TYPES: T-VFD = TRIPLEX W/ VARIABLE FREQUENCY DRIVE FOR EACH VERTICAL MULTI-STAGE PUMP (GRUNDFOS CRE 10-4). REFER TO SPECIFICATIONS FOR MORE INFORMATION.
B. MOTOR HORSEPOWER SHOWN IS FOR ONE PUMP
C. PROVIDE WITH CONTROL PANEL. REFER TO SPECIFICATIONS FOR MORE INFORMATION
D. MINIMUM DISCHARGE HEADER PRESSURE IS 53 PSI
E. PROVIDE PUMPS WITH SCHEDULED DESIGN FLOW RATE WITH TOTAL DYNAMIC HEAD = DISCHARGE PRESSURE - SUCTION PRESSURE + 2PSI FOR SYSTEM LOSSES

WATER HEATER GAS COPPER FIN TUBE SCHEDULE

MARK	MANUFACTURER/ MODEL#	AREA SERVED	INPUT MBH	ELECTRICAL REQUIREMENTS VOLTS	PHASE	FLA	THERMAL EFFICIENCY (%)	RECOVERY (GPH)	WEIGHT (LBS)	NOTES
WHG1	LOCHINVAR #AWN201PM	JAIL	201	120	1	4.7	96	234	185	A, B, C, D

NOTES:

A. 100° TEMPERATURE RISE WITH 140°F OPERATING TEMPERATURE.
B. FURNISHED WITH FACTORY ALL-BRONZE CIRCULATION PUMP
C. ULTRA LOW NOx TYPE - RESIDUAL NOx IS LESS THAN 14 ng / joule. COMPLIES WITH SCAQMD RULE 1146.2
D. PROVIDE WITH CONDENSATE NEUTRALIZATION KIT TO MATCH HEATER INPUT.

TOTAL CONNECTED NATURAL GAS LOAD

MECHANICAL EQUIPMENT

EQUIPMENT DESIGNATION	DESCRIPTION	CFH (EACH)
UH1	UNIT HEATER	150
UH2	UNIT HEATER	60
RTU1	ROOF TOP UNIT	600
RTU2	ROOF TOP UNIT	200
RTU3	ROOF TOP UNIT	200
MUA1	MAKEUP AIR UNIT	150
WHG1	WATER HEATER	199.9
WHG2	WATER HEATER	120
WHG3	WATER HEATER	150
DRYER	LAUNDRY DRYER	175
	TOTAL =	2004.9
	TOTAL CONNECTED LOAD =	2004.9

NATURAL GAS SYSTEM OPERATING PRESSURE:	2 PSI
NATURAL GAS SYSTEM SIZED WITH TOTAL DEVELOPED LENGTH FROM	
GAS METER TO MOST REMOTE PIECE OF EQUIPMENT:	285 FEET
SYSTEM DESIGN PRESSURE DROP:	1 PSI

GAS STORAGE WATER HEATER SCHEDULE

MARK	MANUFACTURER/ MODEL#	AREA SERVED	TANK SIZE (GALLONS)	INPUT MBH	ELECTRICAL DATA VOLTS	PHASE	FLA	RECOVERY (GPH)	WEIGHT (LBS)	NOTES
WHG2	A.O. SMITH # BTH-120	OFFICER AREA	60	120	120	1	5	154	970	A, B, C
WHG3	A.O. SMITH # BTH-150	KITCH/BOOKING	100	150	120	1	5	198	1353	A, B, C

NOTES:

A. 90° TEMPERATURE RISE WITH 140°F OPERATING TEMPERATURE.
B. AUTOMATIC FLUE DAMPER INTERLOCKED WITH WATER HEATER FIRE CONTROL
C. FURNISH WITH CONDENSATE NEUTRALIZATION KIT TO MATCH HEATER INPUT, AO SMITH # CNS SERIES

EXPANSION TANK SCHEDULE

MARK	MANUFACTURER / MODEL #	TANK SIZE (GALLONS)	MIN. ACCEPTANCE VOLUME (GALLONS)	AIR PRESSURE SETTING (PSI)	SERVICE	WEIGHT (LBS)	NOTES
ET1	AMTROL ST-30V-C	14	8.96	40	WHG1	196	A
ET2	AMTROL ST-12	4.4	1.98	40	WHG2	46	A
ET3	AMTROL ST-25V	10.3	4.64	40	WHG3	110	A

NOTES:

A. CHARGE TANK WITH AIR TO IDENTICAL PRESSURE AS STATIC DOMESTIC WATER PRESSURE.

GAS PRESSURE REGULATOR SCHEDULE FOR 2 PSI SYSTEMS

MARK	MANUFACTURER	MODEL	VALVE TYPE	VALVE BODY SIZE (INCHES)	MAX. FLOW RATE (CFH)	INLET PRESSURE (PSI)	OUTLET PRESSURE (INCHES WATER COLUMN)	SERVICE	NOTES
GPR1	PIETRO-FIORENTINI	31052	C	3/4"	665	1	7"	UH1, UH2, MUA1, DRYER	A, B, D, E, F, G, H & I
GPR2	PIETRO-FIORENTINI	31151	C	3/4"	1,421	1	7"	WHG2, WHG3	A, B, D, E, F, G, H & I
GPR3	PIETRO-FIORENTINI	31053	C	1"	893	1	7"	RTU2, RTU3	A, B, D, E, F, G, H & I
GPR4	PIETRO-FIORENTINI	31152	C	1"	1,786	1	7"	WHG1	A, B, D, E, F, G, H & I
GPR5	PIETRO-FIORENTINI	31153	C	1-1/4"	3,735	1	7"	RTU1	A, B, D, E, F, G, H & I

NOTES:

A. C = SELF CONTAINED "DIRECT ACTING" DIAPHRAGM TYPE WITH INTERNAL VENT LIMITER
B. DROOP = 1" WATER COLUMN MAXIMUM
C. DROOP = 2" WATER COLUMN MAXIMUM
D. 65# ALUMINUM BODY, SCREWED CONNECTIONS AND OVERPRESSURE PROTECTION TO 25 PSI
E. MAXIMUM FLOW RATE SCHEDULED, MATCH BODY SIZE AND MAXIMUM FLOW RATE TO EQUIPMENT FLOW RATE. REFER TO EQUIPMENT SHOP DRAWINGS FOR EXACT LOADS.
F. LISTED TO MEET ANSI Z21.80 / CSA 6.22 WITH CSA LISTING STAMP ON REGULATOR BODY
G. GAS PRESSURE REGULATOR INLET PRESSURE = OPERATING PRESSURE - DESIGN FRICTION LOSS
H. 2 PSI MAXIMUM INLET PRESSURE AND 1 PSI MINIMUM INLET PRESSURE
I. PROVIDE EXTERNAL VENT LIMITER (WHERE APPROVED BY LOCAL AUTHORITIES) FOR INDOOR INSTALLATION AND INSTALL PER SPECIFICATIONS. INSTALL OUTDOORS PER SPECIFICATIONS.

RECIRCULATION PUMP SCHEDULE

MARK	MANUFACTURER / MODEL#	LOCATION	GPM	HEAD (FT.)	CONNECTION SIZE	IMPELLER SIZE (IN.)	ELECTR... VOLTS	PHASE	HP	NOTES
RP1	BELL & GOSSETT # NBF-12U	WHG2	1	7	3/4"	N/A	120	1	1/18	A, B, C, D
RP2	BELL & GOSSETT # NBF-12U	WHG3	1	11	3/4"	N/A	120	1	1/18	A, B, C, D
RP3	BELL & GOSSETT # NBF-22U	WHG1	2.5	13	3/4"	N/A	120	1	1/18	A, B, C, D

NOTES:

A. ALL LEAD FREE CAST BRONZE BOOSTER.
B. PROVIDE WITH STRAINER UPSTREAM OF PUMP
C. PROVIDE ADJUSTABLE, SURFACE MOUNTED AQUASTAT - HONEYWELL L6006C
D. SET AQUASTAT TO SHUT OFF RECIRCULATION PUMP AT WATER HEATER SET POINT AND ON AT 10F BELOW SET POINT

PIPE HEAT TRACE SCHEDULE

MARK	MANUFACTURER	MODEL#	APPLICATION	TOTAL LENGTH (FT)	NUMBER OF CIRCUITS	LENGTH PER CIRCUIT (FT)	PIPE HEAT LOSS (W/FT)	TEMP. SETTING (°F) ON	OFF	ELECTRICAL VOLTS	PHASE	NOTES
HT-4	RAYCHEM	8XL2-CT	FLOW MAINTENANCE	160	1	160	7.3	110	120	277	1	B,C,D,E,G

NOTES:

A. POLYOLEFIN OUTER JACKET.
B. FLUOROPOLYMER OUTER JACKET
C. REFER TO SPECIFICATIONS FOR ADDITIONAL INFORMATION.
D. REFER TO HEAT TRACE CONTROL PANEL SCHEDULE FOR ADDITIONAL INFORMATION.
E. COORDINATE WITH ELECTRICAL CONTRACTOR TO PROVIDE WIRING FROM CONTROL PANEL TO JUNCTION BOX ADJACENT TO THE BEGINNING OF THE HEAT TRACE SYSTEM.
F. PROVIDE 2' OF HEAT TRACE ON EACH P-TRAP. COORDINATE WITH ELECTRICAL CONTRACTOR TO PROVIDE WIRING FROM CONTROL PANEL TO A JUNCTION BOX ADJACENT TO EACH P-TRAP.
G. PRIOR TO BID COORDINATE WITH MANUFACTURER TO DETERMINE REQUIRED COMPONENTS TO COMPLETE THE SYSTEM.

HOT WATER STORAGE TANK SCHEDULE

MARK	MANUFACTURER/ MODEL#	AREA SERVED	TANK SIZE (GALLONS)	WEIGHT (LBS)	NOTES
ST1	LOCHINVAR # RGA0257	JAIL	257	2960	A, B, C, D

NOTES:

A. REFER TO SPECIFICATIONS FOR MORE INFORMATION
B. 150# ASME TANK
C. VERTICAL TANK
D. WITH FACTORY PROVIDED INSULATION AND METAL JACKET

HEAT TRACE CONTROL PANEL SCHEDULE

MARK	MANUFACTURER	MODEL#	DEVICE SERVED SERVED	QUANTITY	ELECTRICAL DATA WATTS	VOLTS	PHASE	NOTES
HTCP1	RAYCHEM	# C910-485	HT-1	1	2100	277	1	A-G

NOTES:

A. NEMA 4X FRP ENCLOSURE WITH GROUND FAULT CIRCUIT PROTECTION.
B. LED DISPLAY AND KEYPAD INTERFACE.
C. ALARM LIGHTS FOR HIGH AND LOW TEMPERATURE, CURRENT AND GROUND FAULT.
D. DRY ALARM CONTACTS FOR INTERLOCK WITH BUILDING MANAGEMENT SYSTEM.
E. PROVIDE WITH # RTD4AL REMOTE TEMPERATURE DEVICE AND # RTD-200 STAINLESS STEEL CABLE, LENGTH AS REQUIRED. MOUNT REMOTE TEMPERATURE SENSING DEVICE ON PIPE UNDER INSULATION. REFER TO PLANS FOR LOCATION(S) AND QUANTITY.
F. COORDINATE INSTALLATION WITH ELECTRICAL CONTRACTOR. ELECTRICAL CONTRACTOR SHALL PROVIDE WIRING FROM CONTROL PANEL TO JUNCTION BOX WHERE HEAT TAPE SYSTEM BEGINS.
G. REFER TO SPECIFICATIONS FOR MORE INFORMATION.

WATER PIPE SIZING CHART (IPC) BRANCHES

FIXTURE UNITS VS. PRESSURE LOSS
IN PSI / 100 FEET FOR TYPE "L" COPPER TUBE

PIPE SIZE	INTERNAL DIAMETER	COLD WATER @ 4.00 PSI / 100' FLUSH TANK SFU	FLUSH VALVE SFU	VELOCITY FEET / SEC	FLOW GPM	HOT WATER @ 4.0 PSI / 100' FLUSH TANK SFU	VELOCITY FEET / SEC	FLOW GPM
1/2"	0.545	0.7	N/A	2.9	2.1	*	*	*
3/4"	0.785	2.3	N/A	3.7	5.5	*	*	*
1"	1.025	6.4	N/A	4.4	11.1	*	*	*
1-1/4"	1.265	19.6	6.8	5.0	19.4	*	*	*
1-1/2"	1.505	55.6	14.6	5.5	30.7	45	5	27.7
2"	1.985	193.1	87.8	6.6	63.6	120.9	5	48.2
2-1/2"	2.465	439.3	323.5	7.6	112.4	246.8	5	74.3
3"	2.945	749.1	697.3	8.0	169.8	406	5	106.1
4"	3.905	1764.4	1764.4	8.0	298.6	859.4	5	186.6
6"	5.845	5269.9	5269.9	8.0	669.0	2859.7	5	418.1
8"	7.725	10143.1	10143.1	8.0	1168.6	5653.3	5	730.3
		SIZED WITH HAZEN WILLIAMS CONSTANT "C" =			135	*UTILIZE COLD WATER SIZING CHART		

PLUMBING FIXTURE CONNECTION SCHEDULE

FIXTURE	COLD WATER	HOT WATER	WASTE	VENT
WATER CLOSET (FV)	1-1/4" (NOTE 1)	--	4"	2"
URINAL	3/4" (NOTE 2)	--	2"	2"
LAVATORY/ HAND SINK	1/2"	1/2"	2"	1-1/2"
DRINKING FOUNTAIN	1/2"	--	2"	1-1/2"
JANITOR'S SINK	1/2"	1/2"	3"	2"
FLOOR DRAIN	--	--	2"	2"
TRENCH DRAIN	--	--	4"	2"
SINK	1/2"	1/2"	2"	1-1/2"

NOTES:

PIPE SIZES SHOWN ARE MINIMUM. AND ARE FOR INDIVIUAL SERVICE PIPE SIZES

(NOTE 1) PROVIDE 1-1/4" CW TO FLUSH VALVE, REDUCE TO 1" PRIOR TO CONNECTING TO FLUSH VALVE INLET AT INSIDE OF WALL
(NOTE 2) PROVIDE 1" CW TO FLUSH VALVE, REDUCE TO 3/4" PRIOR TO CONNECTING TO FLUSH VALVE INLET AT INSIDE OF WALL

HENDERSON ENGINEERS
8345 LENEXA DRIVE, SUITE 300
LENEXA, KS 66214
TEL 913.742.5000 FAX 913.742.5001
WWW.HENDERSONENGINEERS.COM
2250004109
IL CORPORATE NO.: 184-002965
EXPIRES 4/30/2025

EXPIRES ON: 11/30/2025

LICENSED PROFESSIONAL ENGINEER
SCOTT A. WALTER
062.075705
OF ILLINOIS

03/01/2024

HMN architects
7400 W. 110th Street, Suite 200
Overland Park, Kansas 66210
913.451.9075 phone
913.451.9080 fax
hmnarchitects.com

KLINGNER & ASSOCIATES, P.C.
Engineers • Architects • Surveyors
604 LIBERTY ST. SUITE. 125
PELLA, IA 50219
515.612.7402
www.klingner.com

Henderson Engineers
8345 Lenexa Dr., Ste 300
Lenexa, KS 66214 913.742.5000
Chastain & Associates LLC
330 N. Central Ave.
Paris, IL 61944 217.465.5006

BID & PERMIT

EDGAR COUNTY PUBLIC SAFETY CENTER
EDGAR COUNTY, ILLINOIS
12636 950TH ROAD
PARIS, ILLINOIS 61944

21003.003

BID & PERMIT

Architect's Name
License # : XXXXX
Date: 03/01/2024

⚠	Issue	Date

Drawn by: Author
Copyright © 2024 by HMN Architects, Inc.

PLUMBING SCHEDULES

P501

SCOTT A. WALTER